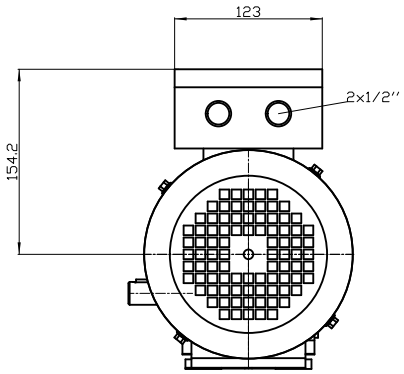

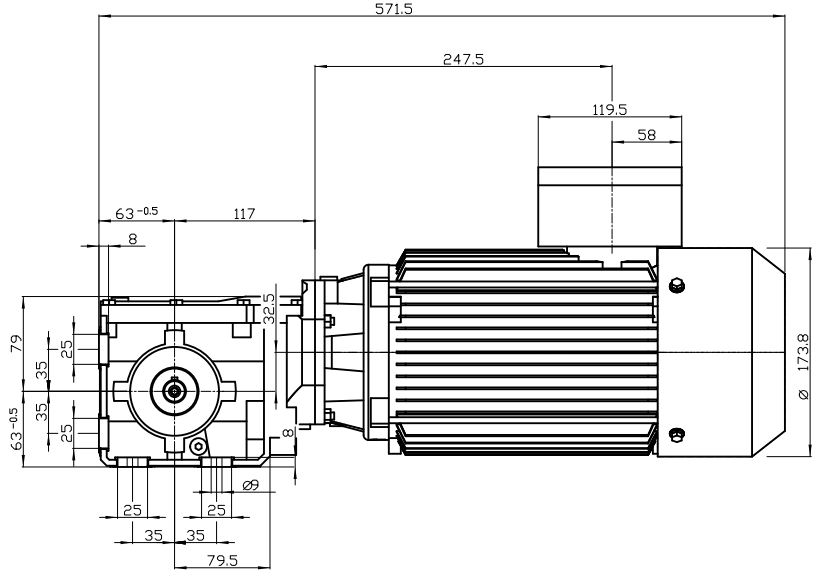

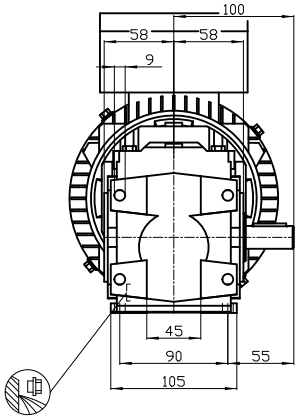

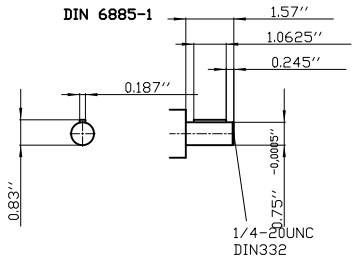

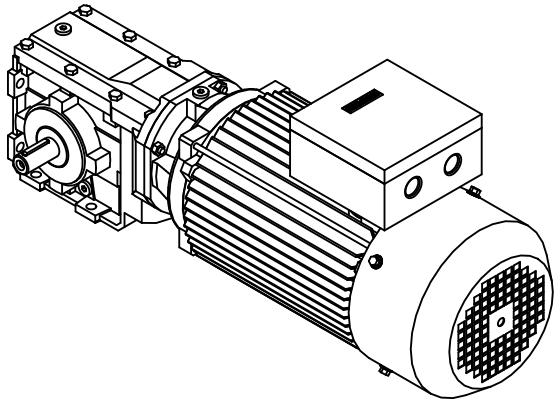

Note: Neither the function rectifier (C59/C60) nor the oil drain valve (G54/G55) can be depicted on the dimension drawing! For more information on this, see page 10/54 of the catalog

SIMOGEAR B29-LE90ZLR4P

–

Unit	mm [in]
Date	2/12/20

2KJ3501-9EM23-9AE1-Z

SIEMENS AG

D11+H6A+K01+K12+L00+M45+M60+N38+N4N

–

DT

Copyright(C) Siemens AG 2005

Cad-drawing: do not make any manual changes

The reproduction or use of this document or its contens is not permitted without express written authority. Offenders will be liable for damages. All rights, including rights created by patent grant or registration of a utility model or design, are reserved.

Weitergabe sowie Vervielfaeltigung dieser Unterlage, Verwertung und Mitteilung ihres Inhalts nicht gestattet, soweit nicht ausdrueckliich zugestanden. Zuwiderhandlungen verpflichten zu Schadenersatz. Alle Rechte vorbehalten, insbesondere fuer den Fall der Patenterteilung oder GM-Eintragung.

Confie a titre de secret d'enterprise. Tous droits reserves.
Confiado como secreto industrial. Nos reservamos todos los derechos
Comunicado como segredo empresarial. Reservados todos os direitos