SIEMENS

## Data sheet 3VA5212-6EC36-0AA0

circuit breaker 3VA5 UL Frame 250 breaking capacity class H 65 kA @ 480 V 3-pole, line protection TM230, FTAM, In=125 A overload protection Ir=125 A permanently set short-circuit protection Ii=5...10 x In cable connection on two sides

| | |
|---|---|
| **Model** | |
| product brand name | SENTRON |
| product designation | Molded-case circuit breaker |
| product designation / according to UL file | HFAS |
| design of the product | System protection |
| design of the load switch / according to UL 489 / Heating, Air Conditioning, and Refrigeration circuit breaker (HACR Type) | Yes |
| design of the load switch / according to UL 489 / High-Intensity-Discharge circuit breaker (HID Type) | No |
| design of the load switch / according to UL 489 / Switching Duty circuit breaker (SWD Type) | No |
| design of the overcurrent release | TM230 |
| protection function of the overcurrent release | LI |
| number of poles | 3 |
| **General technical data** | |
| insulation voltage / rated value | 800 V |
| operating voltage / at DC / rated value | 750 V |
| operating voltage / at AC / rated value | 690 V |
| power loss [W] / maximum | 23 W |
| power loss [W] / for rated value of the current / at AC / in hot operating state / per pole | 7.53 W |
| mechanical service life (operating cycles) / typical | 20 000 |
| electrical endurance (operating cycles) / at AC-1 / at 380/415 V | 8 000 |
| electrical endurance (operating cycles) / at AC-1 / at 690 V | 4 000 |
| electrical endurance (operating cycles) / at 480 V | 8 000 |
| electrical endurance (operating cycles) / at 600 V | 4 000 |
| product feature / for neutral conductors / upgradable/retrofittable / short-circuit and overload proof | No |
| product function | |
| ● communication function | No |
| ● other measurement function | No |
| Net Weight | 2.251 kg |
| **Current** | |
| marking / according to UL 489 / 100%-rated breaker | No |
| operational current | |
| ● at 40 °C | 125 A |
| ● at 45 °C | 121 A |
| ● at 50 °C | 116 A |
| ● at 55 °C | 112 A |
| ● at 60 °C | 108 A |
| ● at 65 °C | 103 A |
| ● at 70 °C | 99 A |


Subject to change without notice
© Copyright Siemens

| | |
|---|---|
| **Switching capacity according to IEC 60947** | |
| switching capacity class of the circuit breaker | H |
| maximum short-circuit current breaking capacity (Icu) | |
| ● at 240 V | 100 kA |
| ● at 415 V | 70 kA |
| ● at 690 V | 10 kA |
| operating short-circuit current breaking capacity (Ics) | |
| ● at 240 V | 100 kA |
| ● at 415 V | 70 kA |
| ● at 690 V | 10 kA |
| short-circuit current making capacity (Icm) | |
| ● at 240 V | 220 kA |
| ● at 415 V | 154 kA |
| ● at 690 V | 17 kA |
| design of short-circuit protection | For switching power values in DC networks, see the 3VA molded case circuit breaker device manual; link to be found under Service & Support in the last chapter |
| **Switching capacity according to UL 489** | |
| current breaking capacity | |
| ● at 240 V | 100 kA |
| ● at 480 V | 65 kA |
| ● at 600 V | 25 kA |
| **Adjustable parameters** | |
| adjustable response value setting current (Ir) / of the L-trip / with I2t characteristic | |
| ● minimum | 125 A |
| ● maximum | 125 A |
| adjustable response value delay time (tr) / for L-tripping / with I2t characteristic | |
| ● minimum | 1 s |
| ● maximum | 1 s |
| adjustable response value setting current (Ii) / for I-tripping | |
| ● minimum | 625 A |
| ● maximum | 1 250 A |
| adjustable setting current (InN) / for N-tripping | |
| ● minimum | 0 A |
| ● maximum | 0 A |
| product function / grounding protection | No |
| **Mechanical Design** | |
| product component | |
| ● undervoltage release | No |
| ● voltage trigger | No |
| ● trip indicator | No |
| height [in] | 7.28 in |
| height | 185 mm |
| width [in] | 4.13 in |
| type of connectable conductor cross-sections / of the round conductor terminal / stranded | 1 x (6 AWG - 350 kcmil) |
| width | 105 mm |
| depth [in] | 3.27 in |
| depth | 83 mm |
| **Connections** | |
| arrangement of electrical connectors / for main current circuit | Front connection |
| type of electrical connection / for main current circuit | circular conductor terminal on both sides |
| **Auxiliary circuit** | |
| number of CO contacts / for auxiliary contacts | 0 |
| **Accessories** | |
| product extension / optional / motor drive | Yes |
| **Environmental conditions** | |
| protection class IP / on the front | IP40 |
| ambient temperature | |
| ● during operation / minimum | -25 °C |


Subject to change without notice
© Copyright Siemens

| | |
|---|---|
| ● during operation / maximum | 70 °C |
| ● during storage / minimum | -40 °C |
| ● during storage / maximum | 80 °C |
| reference code / according to IEC 81346-2 | Q |

## Approvals / Certificates

### General Product Approval

| | | | | | |
|---|---|---|---|---|---|
| UKCA | CE EG-Konf. | Confirmation | CCC | UL | UL |

| General Product Approval | | EMV | Marine / Shipping | other | |
|---|---|---|---|---|---|
| Miscellaneous | EAC | RCM | ABS | Miscellaneous | Confirmation |

| other | Environment |
|---|---|
| Miscellaneous | Environmental Confirmations |

## Further information

**Information on the packaging**
https://support.industry.siemens.com/cs/ww/en/view/109813875
**Information- and Downloadcenter (Catalogs, Brochures,…)**
http://www.siemens.com/lowvoltage/catalogs
**Industry Mall (Online ordering system)**
https://mall.industry.siemens.com/mall/en/en/Catalog/product?mlfb=3VA5212-6EC36-0AA0
**Service&Support (Manuals, Certificates, Characteristics, FAQs,...)**
https://support.industry.siemens.com/cs/ww/en/ps/3VA5212-6EC36-0AA0
**Image database (product images, 2D dimension drawings, 3D models, device circuit diagrams, ...)**
http://www.automation.siemens.com/bilddb/cax_en.aspx?mlfb=3VA5212-6EC36-0AA0
**CAx-Online-Generator**
http://www.siemens.com/cax
**Tender specifications**
http://www.siemens.com/specifications


Subject to change without notice
© Copyright Siemens

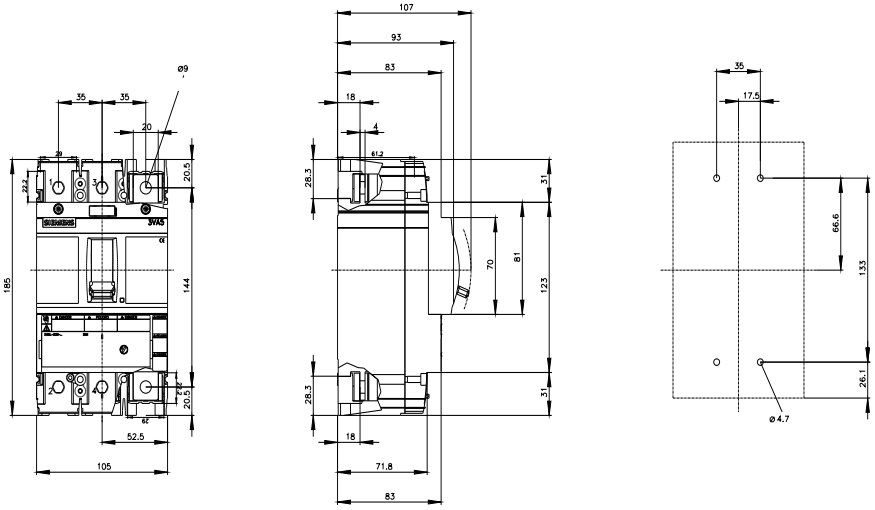


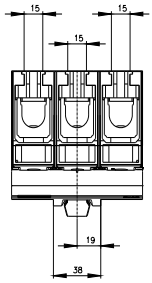


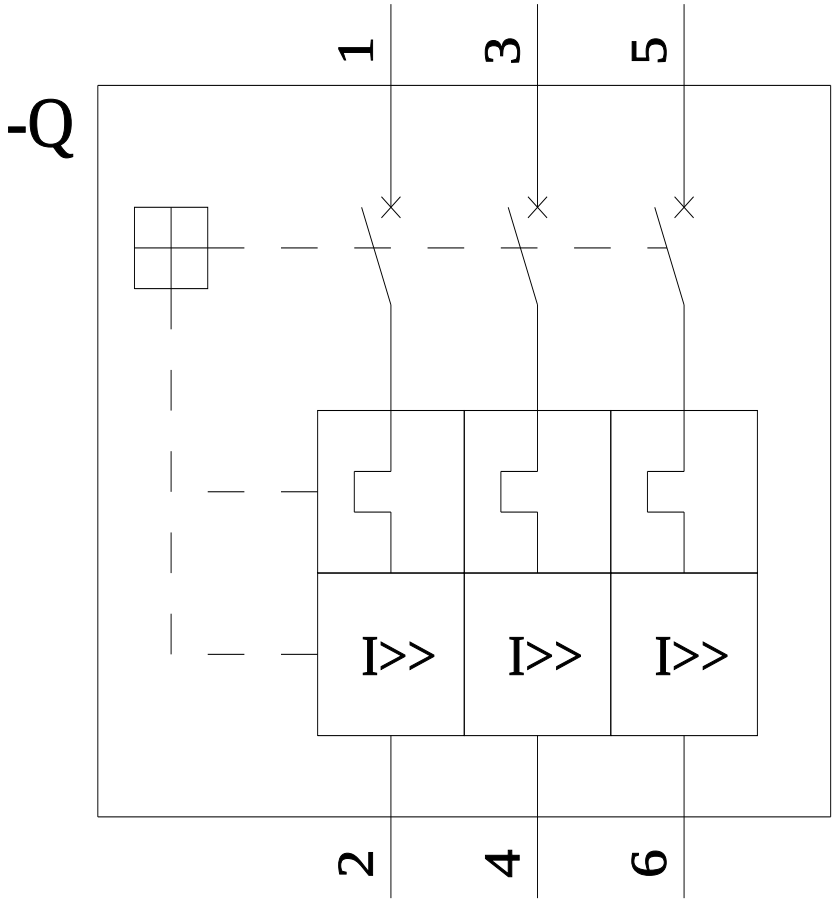



Subject to change without notice
© Copyright Siemens

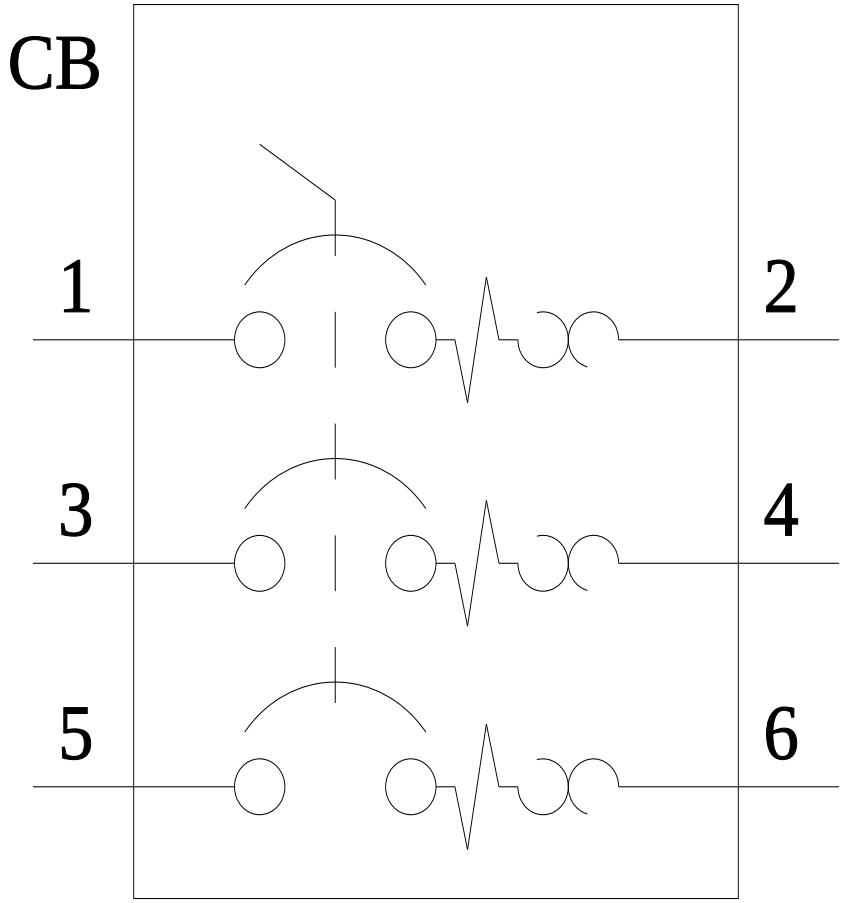


**last modified:** 6/16/2022


Subject to change without notice
© Copyright Siemens

Subject to change without notice
© Copyright Siemens