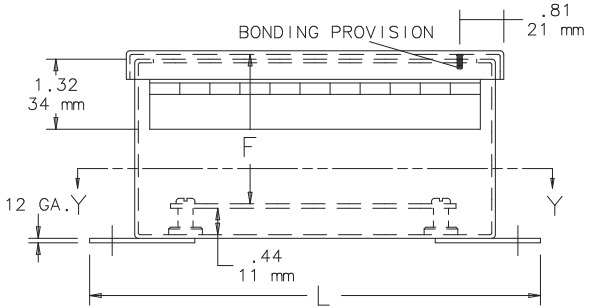

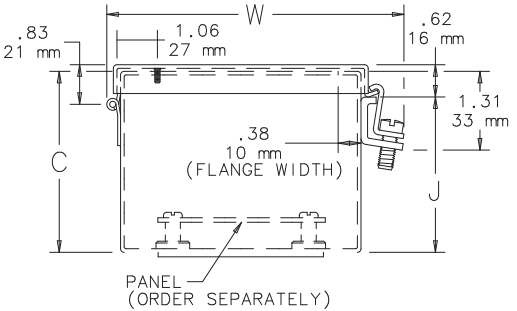

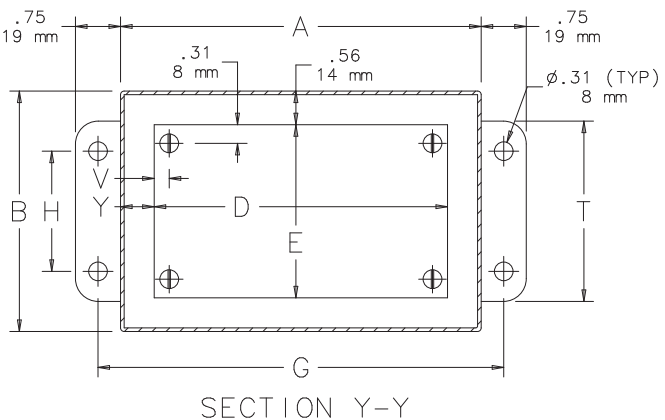

SECTION Y-Y

NOTE:
1. Optional panels are 14 gauge steel, conductive steel or stainless steel
2. Panel screws are #10-32 pan head
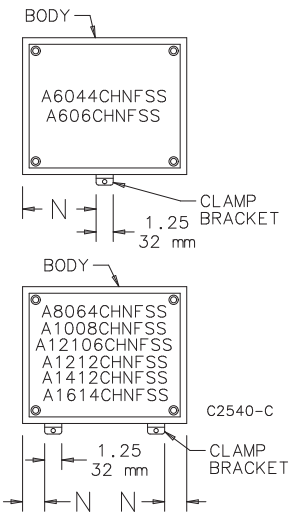
CLAMP BRACKET LOCATIONS