Transmittal, reproduction, dissemination and/or editing of this document as well as utilization of its contents and communication thereof to others without express authorization are prohibited. Offenders will be held liable for payment of damages. All rights created by patent grant or registration of a utility model or design patent are reserved.

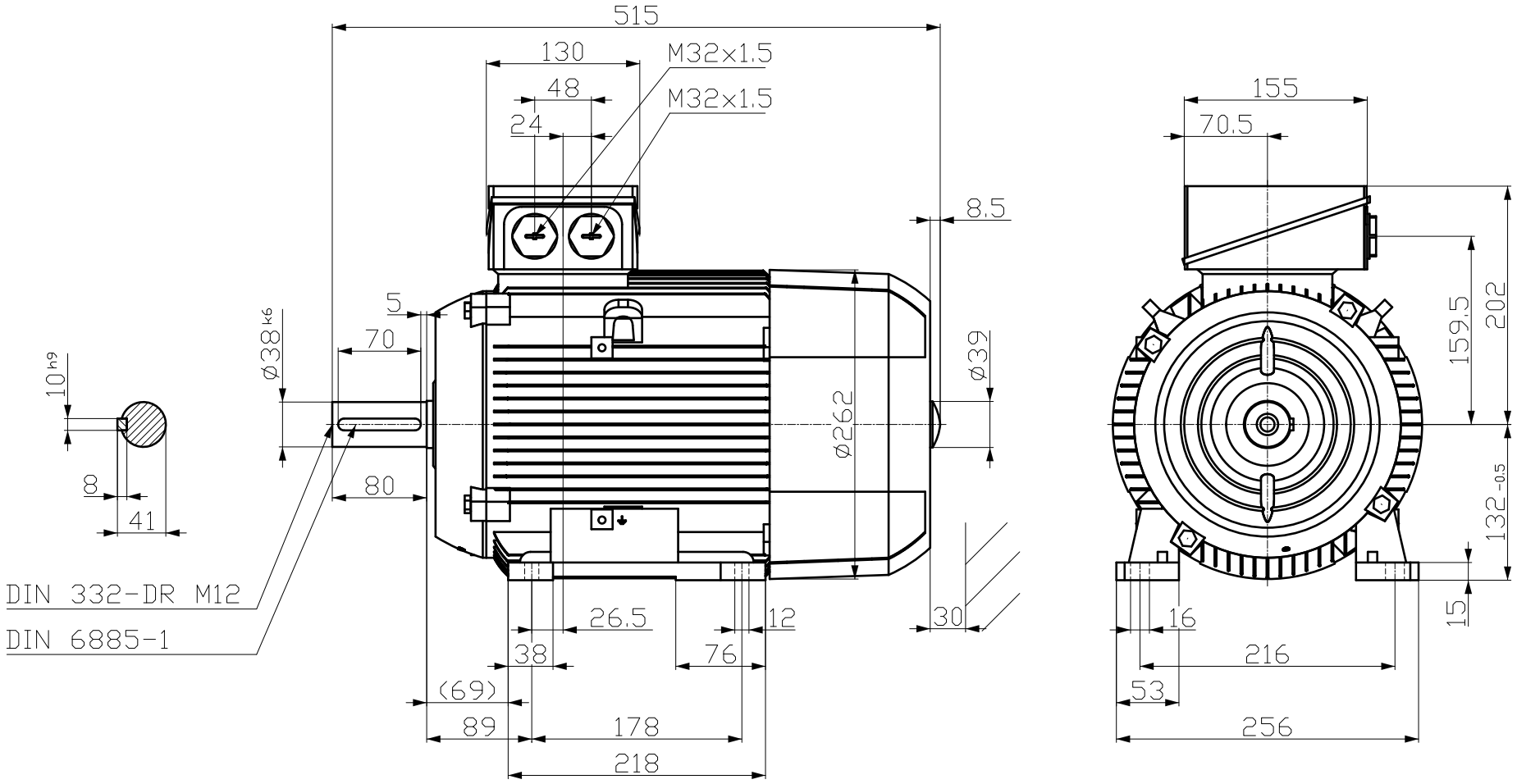

Tolerance	Surface	Material	Weight	Scale
			-	mm

1LE1023-1CC32-2AA4 -	Author	Dimensional drawing MaÇzeichnung	
	Creator DTK		
	Approval		
	Department		
	Change Order	MLFB	Doc Type
SIEMENS	Doc State 2/12/20	Item No	Paper Size A3
	Revision Index RS	Doc No	1st Language en 2nd Language de
© Siemens AG 2018	Project No -	Ref No -	Sheet 1 of 1