SIEMENS

## Data sheet 3VA6710-6HL31-2AA0

circuit breaker 3VA6 UL frame 1200 breaking capacity class H 65kA @ 480 V 3-pole, line protection ETU320, LI, In=1000A 100%-rated, overload protection Ir=400A - 1000A short circuit protection Ii=1,5-12 x In w/o connection

| | |
|---|---|
| **Model** | |
| product brand name | SENTRON |
| product designation | Molded-case circuit breaker |
| product designation / according to UL file | HNAE |
| design of the product | System protection |
| design of the load switch / according to UL 489 / Heating, Air Conditioning, and Refrigeration circuit breaker (HACR Type) | Yes |
| design of the overcurrent release | ETU320 |
| protection function of the overcurrent release | LI |
| number of poles | 3 |
| **General technical data** | |
| insulation voltage / rated value | 800 V |
| operating voltage / at AC / rated value | 600 V |
| power loss [W] / maximum | 169 W |
| power loss [W] / for rated value of the current / at AC / in hot operating state / per pole | 169 W |
| mechanical service life (operating cycles) / typical | 3 000 |
| electrical endurance (operating cycles) / at AC-1 / at 380/415 V | 1 500 |
| electrical endurance (operating cycles) / at AC-1 / at 690 V | 500 |
| electrical endurance (operating cycles) / at 480 V | 1 500 |
| electrical endurance (operating cycles) / at 600 V | 500 |
| product feature / for neutral conductors / upgradable/retrofittable / short-circuit and overload proof | No |
| ground-fault monitoring version | without |
| product function | |
| ● communication function | No |
| ● other measurement function | No |
| Net Weight | 3.133 kg |
| **Current** | |
| marking / according to UL 489 / 100%-rated breaker | Yes |
| operational current | |
| ● at 40 °C | 1 000 A |
| ● at 45 °C | 1 000 A |
| ● at 50 °C | 1 000 A |
| ● at 55 °C | 1 000 A |
| ● at 60 °C | 1 000 A |
| ● at 65 °C | 1 000 A |
| ● at 70 °C | 1 000 A |
| **Switching capacity according to IEC 60947** | |
| switching capacity class of the circuit breaker | H |
| maximum short-circuit current breaking capacity (Icu) | |


Subject to change without notice
© Copyright Siemens

| | |
|---|---|
| ● at 240 V | 110 kA |
| ● at 415 V | 70 kA |
| ● at 690 V | 30 kA |
| operating short-circuit current breaking capacity (Ics) | |
| ● at 240 V | 55 kA |
| ● at 415 V | 35 kA |
| ● at 690 V | 15 kA |
| short-circuit current making capacity (Icm) | |
| ● at 240 V | 242 kA |
| ● at 415 V | 154 kA |
| ● at 690 V | 63 kA |
| **Switching capacity according to UL 489** | |
| current breaking capacity | |
| ● at 240 V | 100 kA |
| ● at 480 V | 65 kA |
| ● at 600 V | 35 kA |
| **Adjustable parameters** | |
| adjustable response value setting current (Ir) / of the L-trip / with I2t characteristic | |
| ● minimum | 400 A |
| ● maximum | 1 000 A |
| adjustable response value delay time (tr) / for L-tripping / with I2t characteristic | |
| ● minimum | 2.5 s |
| ● maximum | 30 s |
| adjustable response value setting current (Ii) / for I-tripping | |
| ● minimum | 1 500 A |
| ● maximum | 12 000 A |
| adjustable current response value current / of instantaneous short-circuit trip unit | |
| ● minimum | 1 500 A |
| ● maximum | 12 000 A |
| product function / grounding protection | No |
| **Mechanical Design** | |
| product component | |
| ● undervoltage release | No |
| ● trip indicator | No |
| height [in] | 8.14 in |
| height | 206.9 mm |
| width [in] | 8.99 in |
| width | 228.4 mm |
| depth [in] | 16 in |
| depth | 406.4 mm |
| **Connections** | |
| type of electrical connection / for main current circuit | without terminals |
| design of the surface / of the connections / on the top of the switch (N, 1, 3, 5) | silver |
| design of the surface / of the connections / on the bottom of the switch (N, 2, 4, 6) | silver |
| **Auxiliary circuit** | |
| number of CO contacts / for auxiliary contacts | 0 |
| **Environmental conditions** | |
| protection class IP / on the front | IP40 |
| ambient temperature | |
| ● during operation / minimum | -25 °C |
| ● during operation / maximum | 70 °C |
| ● during storage / minimum | -40 °C |
| ● during storage / maximum | 80 °C |
| **Certificates** | |
| reference code / according to IEC 81346-2 | F |
| certificate of suitability / as approval for NAVAL (no combat vessels) / supplement SB | No |


Subject to change without notice
© Copyright Siemens

## General Product Approval

| | | | | | |
|---|---|---|---|---|---|
| CCC | Confirmation | UL | UL | VDE | Miscellaneous |

| General Product Approval | Declaration of Conformity | | Test Certificates | Marine / Shipping | other |
|---|---|---|---|---|---|
| EAC | CE EG-Konf. | UKCA | Type Test Certificates/Test Report | ABS | Confirmation |

## other

Miscellaneous

## Further information

**Siemens has decided to exit the Russian market (see here).**
https://press.siemens.com/global/en/pressrelease/siemens-wind-down-russian-business
**Siemens is working on the renewal of the current EAC certificates.**
Please contact your local Siemens office on the status of validity of the EAC certification if you intend to import or offer to supply these products to an EAC relevant market (other than the sanctioned EAEU member states Russia or Belarus).
**Information on the packaging**
https://support.industry.siemens.com/cs/ww/en/view/109813875
**Information- and Downloadcenter (Catalogs, Brochures,…)**
http://www.siemens.com/lowvoltage/catalogs
**Industry Mall (Online ordering system)**
https://mall.industry.siemens.com/mall/en/en/Catalog/product?mlfb=3VA6710-6HL31-2AA0
**Service&Support (Manuals, Certificates, Characteristics, FAQs,...)**
https://support.industry.siemens.com/cs/ww/en/ps/3VA6710-6HL31-2AA0
**Image database (product images, 2D dimension drawings, 3D models, device circuit diagrams, ...)**
http://www.automation.siemens.com/bilddb/cax_en.aspx?mlfb=3VA6710-6HL31-2AA0
**CAx-Online-Generator**
http://www.siemens.com/cax
**Tender specifications**
http://www.siemens.com/specifications


Subject to change without notice
© Copyright Siemens

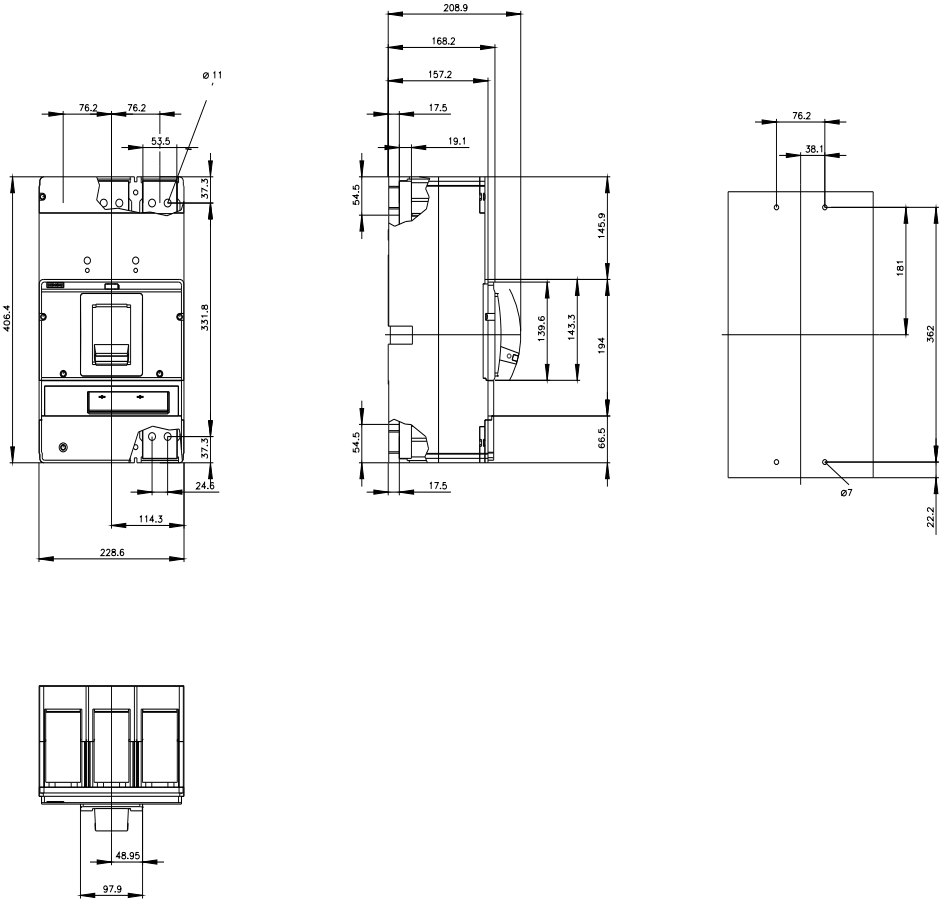


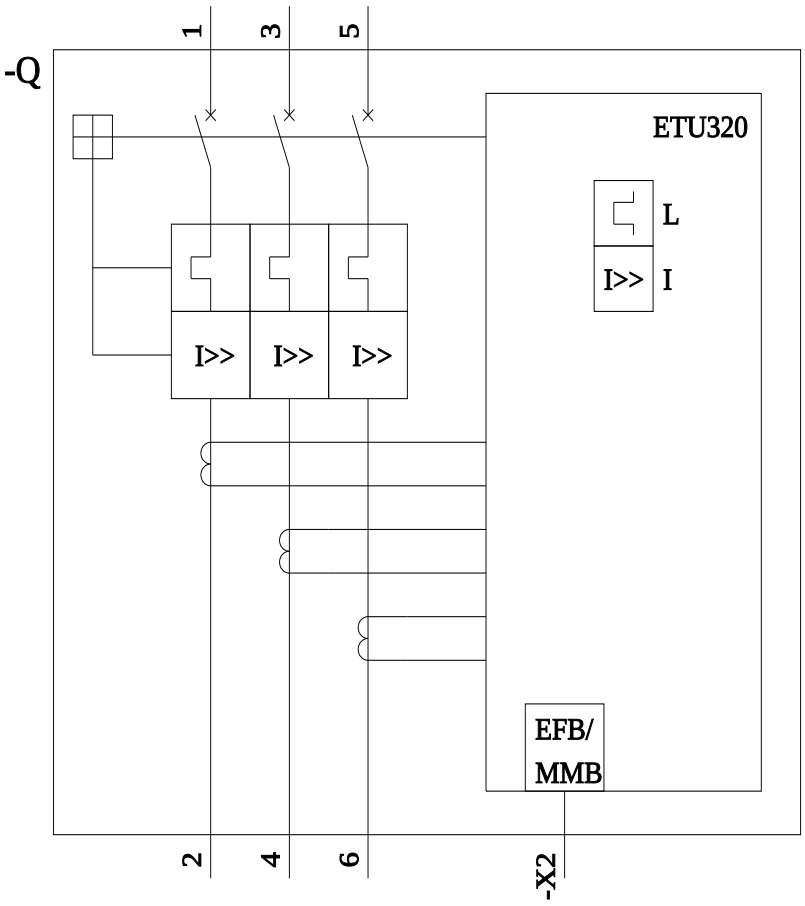



Subject to change without notice
© Copyright Siemens

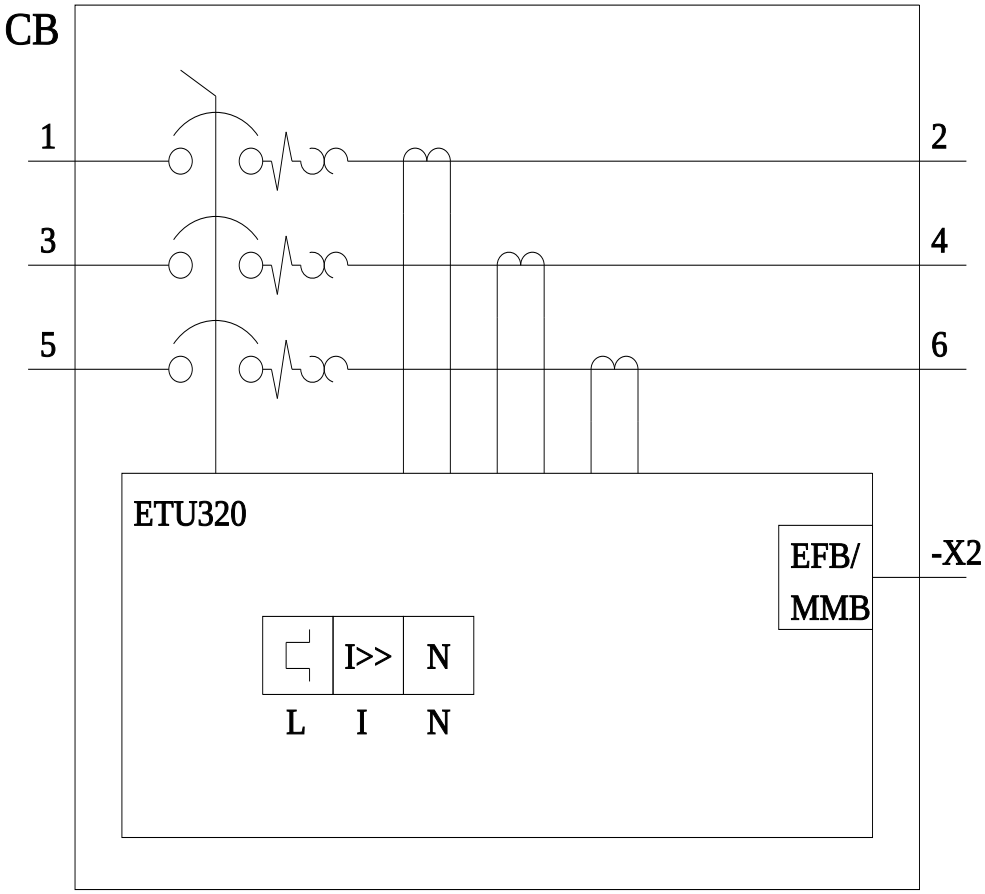


**last modified:** 8/8/2023


Subject to change without notice
© Copyright Siemens

Subject to change without notice
© Copyright Siemens