Transmittal, reproduction, dissemination and/or editing of this document as well as utilization of its contents and communication thereof to others without express authorization are prohibited. Offenders will be held liable for the payment of damages. All rights created by patent grant or registration of a utility model or design patent are reserved.

Weitergabe sowie Vervielfältigung, Verbreitung und/oder Bearbeitung dieses Dokumentes, Verwertung und Mitteilung seines Inhaltes sind verboten, soweit nicht ausdrücklich gestattet. Zuwiderhandlungen verpflichten zu Schadensersatz. Alle Rechte für den Fall der Patenterteilung, Gebrauchsmuster- oder Geschmacksmustereintragung vorbehalten

Confidential secret de secret d'entreprise. Tous droits réservés.
Comunicado como secreto empresarial. Reservados todos os direitos.
[redacted]
Confiado como secreto de empresa. Nos reservamos todos los derechos.

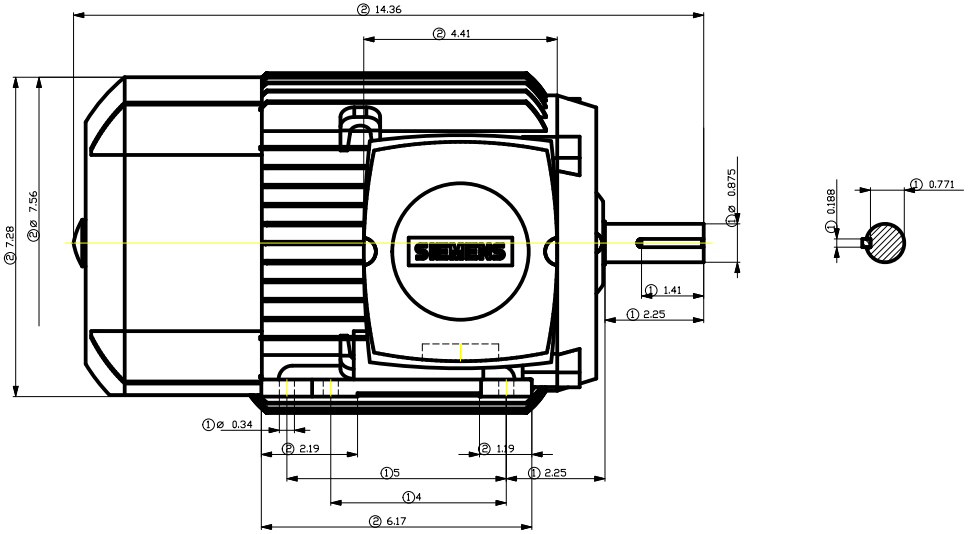





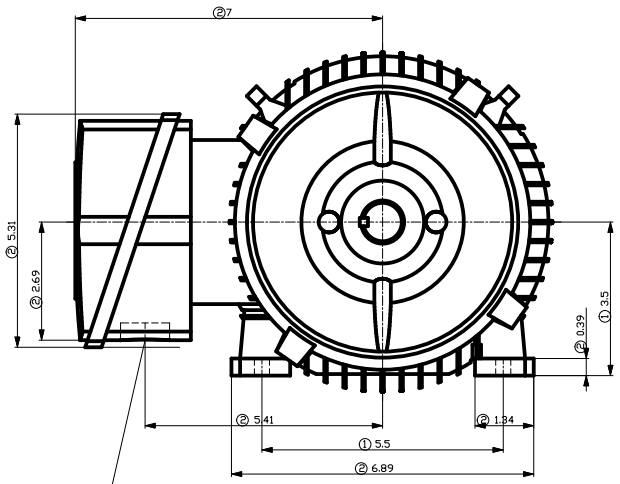


Hole 1.12'' for conduit size 3/4''

① Tolerances according to NEMA std.

② All these dimensions corresponding to assemblies and castings shall have a tolerance as per DIN standard 1686-GTB 19

③ Not according to NEMA std.

| | | | | |
|---|---|---|---|---|
| Tolerance | Surface | Material | Weight - | Scale |
| 1LE2121-1AA21-4AA3<br>- | Author | Dimensional drawing<br>MaÇzeichnung | | |
| | Creator DTK | | | |
| | Approval | | | |
| | Department | | | |
| | Change Order | MLFB | Doc Type | |
| SIEMENS | Doc State 2/12/20 | Item No | Paper Size A3 | |
| | Revision Index RS | Doc No | 1st Language en<br>2nd Language de | |
| © Siemens AG 2016 | Project No - | Ref No - | Sheet 1 of 1 | |