SIEMENS

Data sheet 3VA2125-8HK32-0AA0

Siemens EcoTech

circuit breaker 3VA2 IEC Frame 160 breaking capacity class L Icu=150 kA @ 415 V 3-pole, line protection ETU340, ELISA LI, In=25 A overload protection Ir=10 A...25 A short-circuit protection Ii=15 x In nut keeper kit

Model	
product brand name	SENTRON
product designation	Molded case circuit breaker
design of the product	Line protection
design of the overcurrent release	ETU340
protection function of the overcurrent release	ELISA LI
number of poles	3
General technical data	
insulation voltage / rated value	800 V
operating voltage / at AC / rated value	690 V
power loss [W] / maximum	0.5 W
power loss [W] / for rated value of the current / at AC / in hot operating state / per pole	0.17 W
mechanical service life (operating cycles) / typical	25 000
electrical endurance (operating cycles) / at AC-1 / at 380/415 V	14 000
electrical endurance (operating cycles) / at AC-1 / at 690 V	9 800
product feature / for neutral conductors / upgradable/retrofittable / short-circuit and overload proof	No
ground-fault monitoring version	Without
product function	
● communication function	No
● other measurement function	No
Net Weight	2.5 kg
Current	
operational current	
● at 40 °C	25 A
● at 45 °C	25 A
● at 50 °C	25 A
● at 55 °C	25 A
● at 60 °C	25 A
● at 65 °C	25 A
● at 70 °C	25 A
Switching capacity according to IEC 60947	
switching capacity class of the circuit breaker	L
maximum short-circuit current breaking capacity (Icu)	
● at 240 V	200 kA
● at 415 V	150 kA
● at 440 V	150 kA

Subject to change without notice
© Copyright Siemens

● at 500 V	100 kA
● at 690 V	25 kA
operating short-circuit current breaking capacity (Ics)	
● at 240 V	200 kA
● at 415 V	150 kA
● at 440 V	150 kA
● at 500 V	100 kA
● at 690 V	18 kA
short-circuit current making capacity (Icm)	
● at 240 V	440 kA
● at 415 V	330 kA
● at 440 V	330 kA
● at 500 V	220 kA
● at 690 V	52.5 kA
Adjustable parameters	
product feature / for L-tripping / can be switched on/off	No
adjustable current response value current / of the L-trip / with I4t characteristic	10 ... 25 A
adjustable response value delay time (tr) / for L-tripping / with I4t characteristic	
● minimum	1 300 s
● maximum	1 300 s
adjustable response value setting current (Ii) / for I-tripping	
● minimum	375 A
● maximum	375 A
adjustable setting current (InN) / for N-tripping	
● minimum	0 A
● maximum	0 A
product function / grounding protection	No
Mechanical Design	
product component	
● undervoltage release	No
● voltage trigger	No
● trip indicator	No
height [in]	7.13 in
height	181 mm
width [in]	4.13 in
width	105 mm
depth [in]	3.39 in
depth	86 mm
Connections	
arrangement of electrical connectors / for main current circuit	Front terminal
type of electrical connection / for main current circuit	on both sides nut keeper kit
type of connectable conductor cross-sections / for flat-bar terminal connection / minimum	13 x 1 mm
type of connectable conductor cross-sections / for flat-bar terminal connection / maximum	25 x 8 mm
design of the surface / of the connections / on the top of the switch (N, 1, 3, 5)	tin
design of the surface / of the connections / on the bottom of the switch (N, 2, 4, 6)	tin
Auxiliary circuit	
number of CO contacts / for auxiliary contacts	0
Accessories	
product extension / optional / motor drive	Yes
Environmental conditions	
protection class IP / on the front	IP40
ambient temperature	
● during operation / minimum	-25 °C
● during operation / maximum	70 °C
● during storage / minimum	-40 °C
● during storage / maximum	80 °C

Subject to change without notice
© Copyright Siemens

Environmental footprint	
Global Warming Potential [CO2 eq] / total	61.814 kg
Global Warming Potential [CO2 eq] / during manufacturing	14.6 kg
Global Warming Potential [CO2 eq] / during operation	48.9 kg
Global Warming Potential [CO2 eq] / after end of life	-2.2 kg
Siemens Eco Profile (SEP)	Siemens EcoTech
reference code / according to IEC 81346-2	Q

Approvals / Certificates

General Product Approval

CCC	EG-Konf.	UK CA	Confirmation	VDE	Miscellaneous

General Product Approval	EMV	Test Certificates			Marine / Shipping
EAC	RCM	Type Test Certificates/Test Report	Special Test Certificate	Miscellaneous	BUREAU VERITAS

Marine / Shipping		other			Dangerous goods
DNV	CCS (China Classification Society)	Miscellaneous	Confirmation	Miscellaneous	Transport Information

Environment

EPD	Siemens EcoTech	Environmental Confirmations	Environmental Confirmations

Further information

Information on the packaging
https://support.industry.siemens.com/cs/ww/en/view/109813875
Information- and Downloadcenter (Catalogs, Brochures,…)
http://www.siemens.com/lowvoltage/catalogs
Industry Mall (Online ordering system)
https://mall.industry.siemens.com/mall/en/en/Catalog/product?mlfb=3VA2125-8HK32-0AA0
Service&Support (Manuals, Certificates, Characteristics, FAQs,...)
https://support.industry.siemens.com/cs/ww/en/ps/3VA2125-8HK32-0AA0
Image database (product images, 2D dimension drawings, 3D models, device circuit diagrams, ...)
http://www.automation.siemens.com/bilddb/cax_en.aspx?mlfb=3VA2125-8HK32-0AA0
CAx-Online-Generator
http://www.siemens.com/cax
Tender specifications
http://www.siemens.com/specifications

Subject to change without notice
© Copyright Siemens

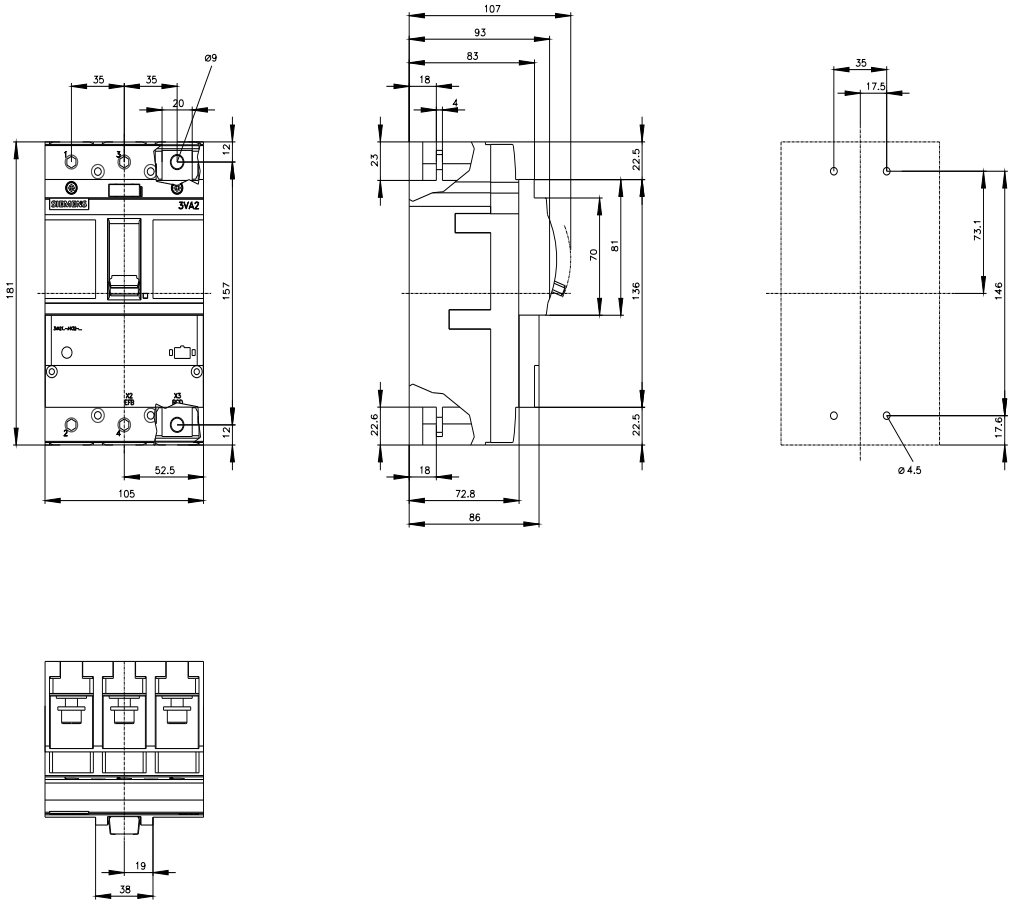

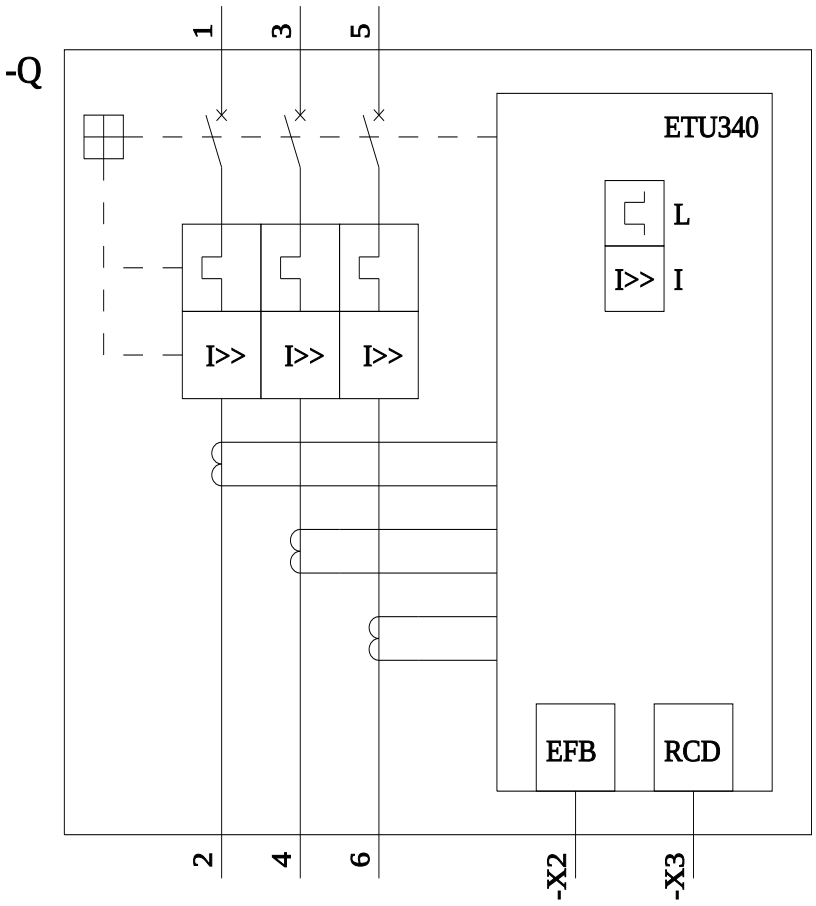

last modified: 10/24/2024

Subject to change without notice
© Copyright Siemens

Subject to change without notice
© Copyright Siemens

Subject to change without notice
© Copyright Siemens