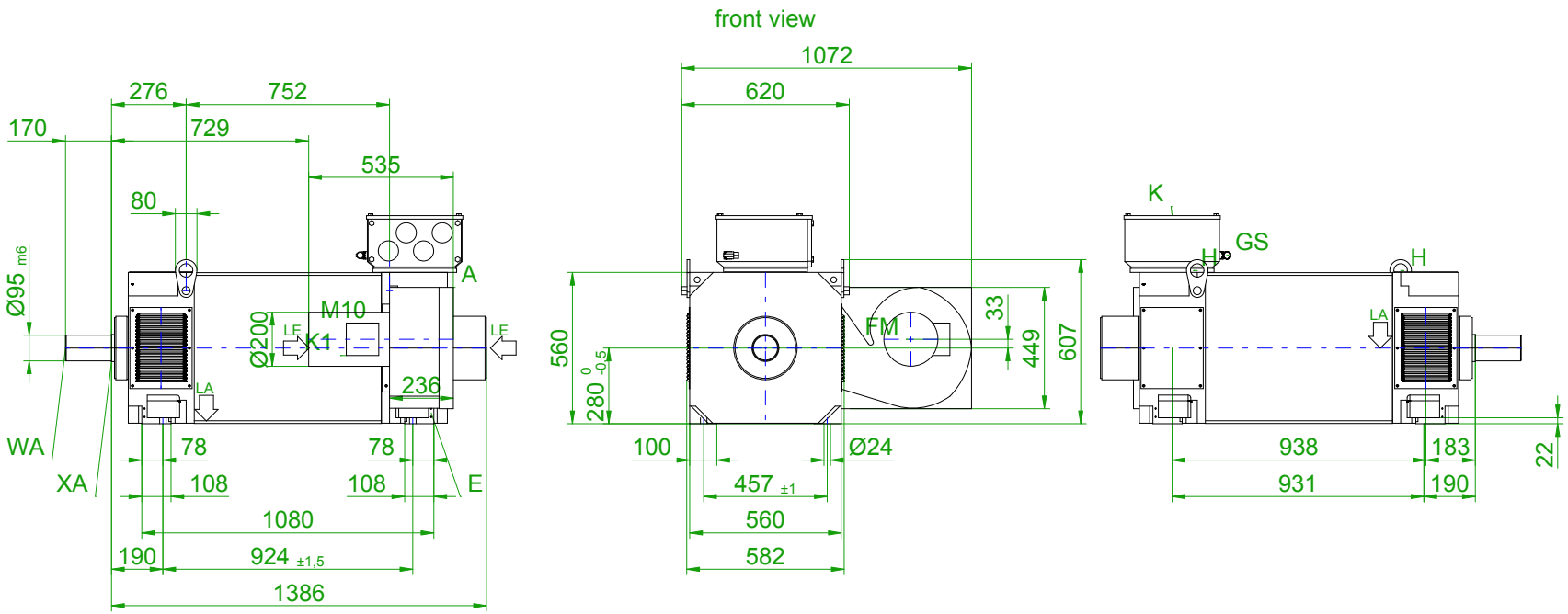

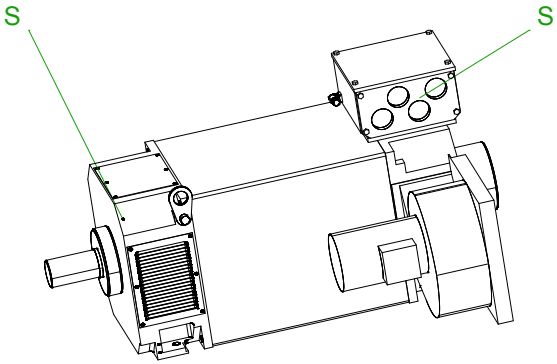

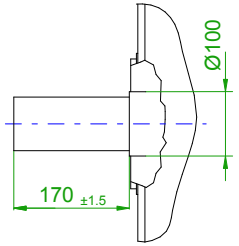

A - Separately driven fan with grid, FM - fan motor
GS - Connector for pulse generator and temperature sensor
XA - Relief groove E2,5x0,4 to DIN509

K1 - Terminal Box for fan motor
M10 - Cable Entry 2xM20x1,5
K - Terminal box
M - Cable entry 4x M75x1,5
WA - Shaft extension 95 m6x170-0,5 to DIN 748, tapped centre hole DR M24 to DIN332

LE - Air inlet, LA - Air outlet
E - Ground Clamp
H - Lifting eye - do only with traverse
S - Greasing nipple

Type of protection IP 55
Type of construction IM B3 (IM V6)

	SIEMENS	
Einheit / unit: mm	Asynchron-Servomotor Asynchronous Servo Motor	1PH8288-1MF10-0AW1-Z
nicht tolerierte Maße / not toleranced dimensions:	Optionen / options:	G02
	Gewicht / mass:	1650 kg
Maßstab / scale: ohne / without	Bemerkung / notice:	
CAD CREATOR 2.2 (WWW-Version V02.20.00.00)		Druckdatum / print date: 05.02.2020