back view

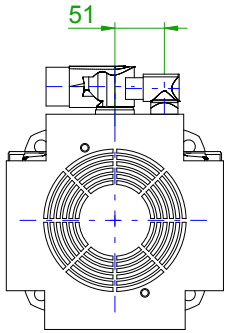

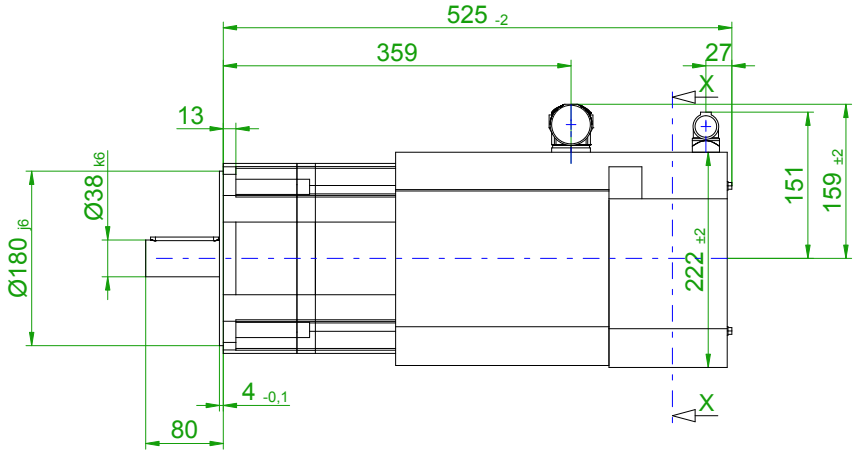

front view

center hole
DIN 332-DR M12

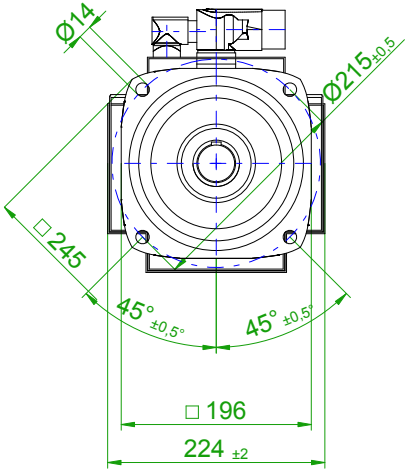

version with featherkey

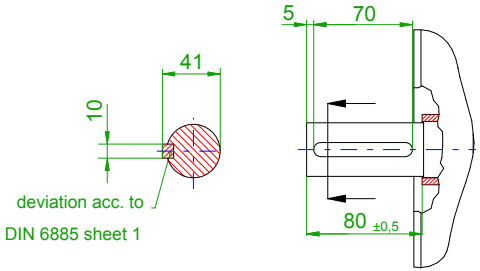

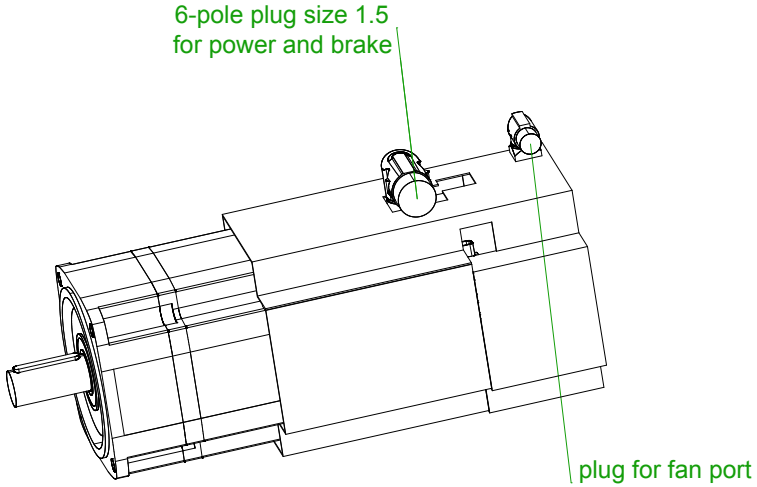

X-X

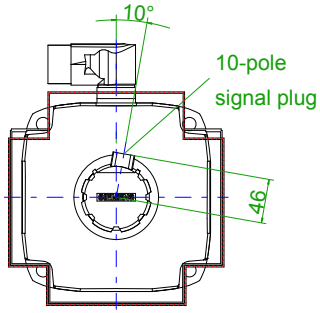

Take care of additional installation space
for assembling the signal cable

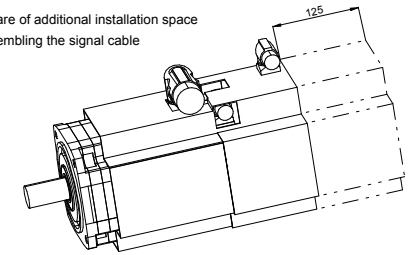

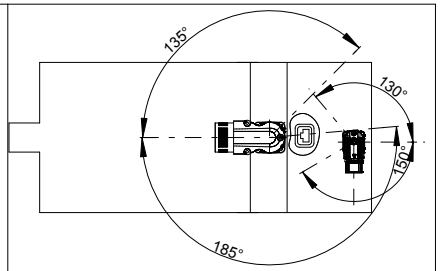

	SIEMENS	
Einheit / unit: mm	Synchron-Servomotor Synchronous Servo Motor:	1FT7108-5SC71-1BB0
nicht tolerierte Maße / not toleranced dimensions: ±1	Optionen / options:	
	Gewicht / mass:	70.9 kg
Maßstab / scale: ohne / without	Bemerkung / notice:	
CAD CREATOR 2.2 (WWW-Version V02.20.00.00)		Druckdatum / print date: 24.09.2018