SIEMENS

Data sheet 3SU1050-4BN51-0AA0-Z X90

RONIS key-operated switch, 22 mm, round, metal, shiny, lock number SB30, with 2 keys, 3 switch positions I-O<II, left latching, right momentary contact type, actuating angle 2x45°, 10:30h/12h/13:30h, key removal O+I, possible special locks: SB31, 421, 455, Z=50-unit packaging

Product brand name	SIRIUS ACT
Product designation	Key-operated switches
Design of the product	Actuating/signaling element
Product type designation	3SU1
Product line	Metal, shiny, 22 mm
Manufacturer's article number	
• **of included key**	3SU1950-0FB80-0AA0

Actuator	
Manner of function of the actuating element	latching/momentary contact, 2x45° (10:30 h/12 h/13:30 h), return from right, left latching
Product extension optional Light source	No
Color	
• of the actuating element	silver
Material of the actuating element	metal
Shape of the actuating element	Key
Outer diameter of the actuating element	29.5 mm
Number of switching positions	3
Switch position for key distraction	O+I
Actuating angle	

Subject to change without notice
© Copyright Siemens

• clockwise	45°
• anticlockwise	45°
Lock make	RONIS
Key number	SB30

Front ring

Product component front ring	Yes
Design of the front ring	Standard
Material of the front ring	Metal, high gloss
Color of the front ring	silver

General technical data

Protection class IP	IP66, IP67, IP69(IP69K)
• of the terminal	IP20
Degree of protection NEMA rating	1, 2, 3, 3R, 4, 4X, 12, 13
Shock resistance	
• acc. to IEC 60068-2-27	Sinusoidal half-wave 50 g / 11 ms
Vibration resistance	
• acc. to IEC 60068-2-6	10 ... 500 Hz: 5g
Operating frequency maximum	1 800 1/h
Mechanical service life (switching cycles)	
• typical	300 000
Reference code acc. to DIN EN 81346-2	S
Reference code acc. to DIN EN 61346-2	S

Ambient conditions

Ambient temperature	
• during operation	-25 ... +70 °C
• during storage	-40 ... +80 °C
Environmental category during operation acc. to IEC 60721	3M6, 3S2, 3B2, 3C3, 3K6 (with relative air humidity of 10 ... 95 %)

Installation/ mounting/ dimensions

Height	29.5 mm
Width	29.5 mm
Shape of the installation opening	round
Mounting diameter	22.3 mm
Positive tolerance of installation diameter	0.4 mm
Mounting height	49.4 mm
Installation width	29.5 mm
Installation depth	25.4 mm

Certificates/ approvals

Subject to change without notice
© Copyright Siemens

General Product Approval			Declaration of Conformity		Test Certificates
CSA	UL	EAC	EG-Konf.	Miscellaneous	Type Test Certificates/Test Report

Test Certificates	Marine / Shipping				
Special Test Certificate	ABS	LRS	PRS	RINA	RMRS

Marine / Shipping	other
	Confirmation

Further information

Information- and Downloadcenter (Catalogs, Brochures,…)
https://www.siemens.com/ic10

Industry Mall (Online ordering system)
https://mall.industry.siemens.com/mall/en/en/Catalog/product?mlfb=3SU1050-4BN51-0AA0-Z X90

Cax online generator
http://support.automation.siemens.com/WW/CAXorder/default.aspx?lang=en&mlfb=3SU1050-4BN51-0AA0-Z X90

Service&Support (Manuals, Certificates, Characteristics, FAQs,...)
https://support.industry.siemens.com/cs/ww/en/ps/3SU1050-4BN51-0AA0-Z X90

Image database (product images, 2D dimension drawings, 3D models, device circuit diagrams, EPLAN macros, ...)
http://www.automation.siemens.com/bilddb/cax_de.aspx?mlfb=3SU1050-4BN51-0AA0-Z X90&lang=en

Subject to change without notice
© Copyright Siemens

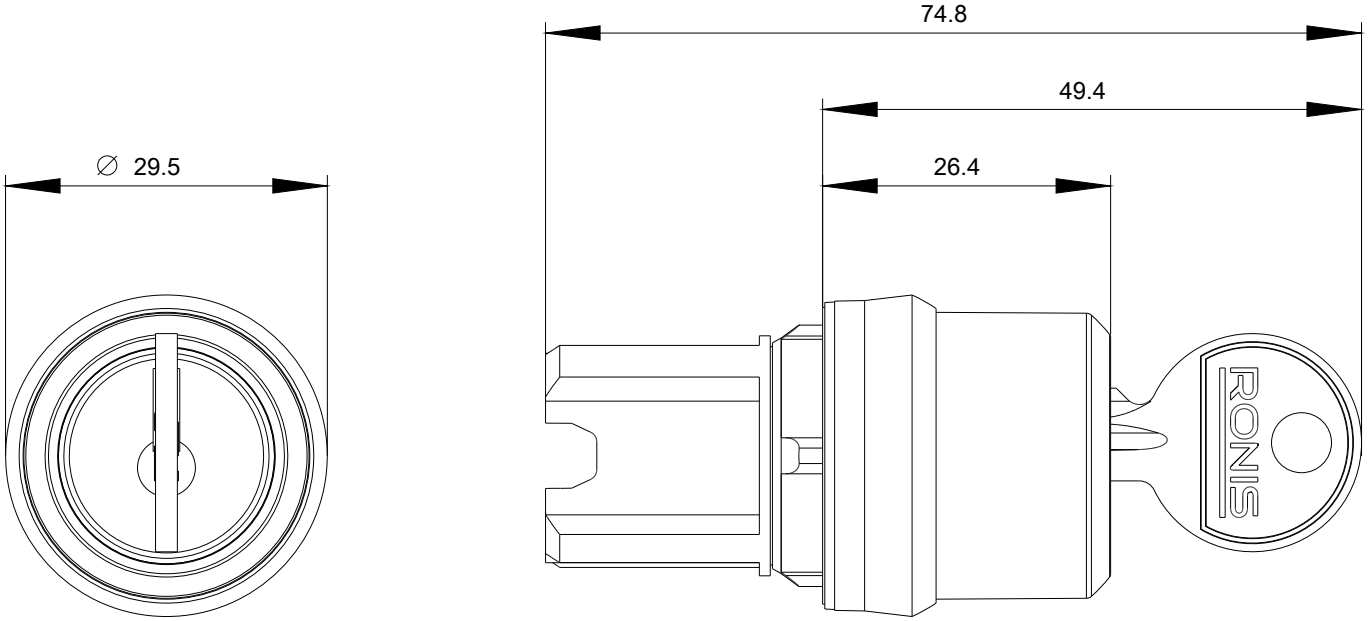

last modified: 02/18/2020

Subject to change without notice
© Copyright Siemens