SIEMENS

## Data sheet US2:84DUA950MD

Duplex starter W/O alternator Size 1 Three phase full voltage Solid-state overload relay OLRelay amp range 0.25-1A 208VAC 60HZ coil Combination type Two 3A circuit breakers Enclosure NEMA type 4/12 Water/dust tight weather proof

Figure similar

| | |
|---|---|
| Product brand name | Class 84 |
| Design of the product | Duplex controller with two MCPs without alternator |
| Special product feature | ESP200 overload relay |

| General technical data | |
|---|---|
| Weight [lb] | 70 lb |
| Height x Width x Depth [in] | 34 × 25 × 8 in |
| Protection against electrical shock | NA for enclosed products |
| Installation altitude [ft] at height above sea level maximum | 6560 ft |
| Ambient temperature [°F] | |
| • during storage maximum | 149 °F |
| • during operation maximum | 104 °F |
| Ambient temperature | |
| • during storage maximum | 65 °C |
| • during operation maximum | 40 °C |
| Country of origin | USA |

## Horsepower ratings


Subject to change without notice
© Copyright Siemens

| | |
|---|---|
| Yielded mechanical performance [hp] for three-phase AC motor | |
| • at 200/208 V rated value | 0.17 hp |
| • at 220/230 V rated value | 0.17 hp |
| • at 460/480 V rated value | 0.33 hp |
| • at 575/600 V rated value | 0.5 hp |

| Contactor | |
|---|---|
| Size of contactor | NEMA controller size 1 |
| Number of NO contacts for main contacts | 3 |
| Operating voltage for main current circuit at AC at 60 Hz maximum | 600 V |
| Operating current at AC at 600 V rated value | 27 A |
| Mechanical service life (switching cycles) of the main contacts typical | 10000000 |

| Auxiliary contact | |
|---|---|
| Number of NC contacts at contactor for auxiliary contacts | 0 |
| Number of NO contacts at contactor for auxiliary contacts | 1 |
| Number of total auxiliary contacts maximum | 8 |
| Contact rating of auxiliary contacts of contactor according to UL | 10A@600VAC (A600), 5A@600VDC (P600) |

| Coil | |
|---|---|
| Type of voltage of the control supply voltage | AC |
| Control supply voltage | |
| • at DC rated value | 0 ... 0 V |
| • at AC at 50 Hz rated value | 0 ... 0 V |
| • at AC at 60 Hz rated value | 208 ... 208 V |
| Holding power at AC minimum | 8.6 W |
| Apparent pick-up power of magnet coil at AC | 218 V·A |
| Apparent holding power of magnet coil at AC | 25 V·A |
| Operating range factor control supply voltage rated value of magnet coil | 0.85 ... 1.1 |
| Percental drop-out voltage of magnet coil related to the input voltage | 50 % |
| Switch-on delay time | 19 ... 29 ms |
| Off-delay time | 10 ... 24 ms |

| Overload relay | |
|---|---|
| Product function | |
| • Overload protection | Yes |
| • Phase failure detection | Yes |
| • Phase unbalance | Yes |


Subject to change without notice
© Copyright Siemens

| | |
|---|---|
| • Ground fault detection | Yes |
| • Test function | Yes |
| • External reset | Yes |
| Reset function | Manual, automatic and remote |
| Trip class | Class 5 / 10 / 20 (factory set) / 30 |
| Adjustable pick-up value current of the current-dependent overload release | 0.25 ... 1 A |
| Trip time at phase-loss maximum | 3 s |
| Relative repeat accuracy | 1 % |
| Product feature Protective coating on printed-circuit board | Yes |
| Number of NC contacts of auxiliary contacts of overload relay | 1 |
| Number of NO contacts of auxiliary contacts of overload relay | 1 |
| Operating current of auxiliary contacts of overload relay | |
| • at AC at 600 V | 5 A |
| • at DC at 250 V | 1 A |
| Contact rating of auxiliary contacts of overload relay according to UL | 5A@600VAC (B600), 1A@250VDC (R300) |
| Insulation voltage | |
| • with single-phase operation at AC rated value | 600 V |
| • with multi-phase operation at AC rated value | 300 V |

| Enclosure | |
|---|---|
| Degree of protection NEMA rating of the enclosure | NEMA Type 12 |
| Design of the housing | Dust tight and drip proof for indoors |

| Motor Circuit Protector (magnetic trip only) | |
|---|---|
| Operating current of motor circuit breaker rated value | 3 A |
| Adjustable pick-up value current of instantaneous short-circuit trip unit | 10 ... 35 A |

| Mounting/wiring | |
|---|---|
| Mounting position | Vertical |
| Mounting type | Surface mounting and installation |
| Type of electrical connection for supply voltage line-side | Box lug |
| Type of connectable conductor cross-sections at line-side at AWG conductors single or multi-stranded | 1x (14 AWG ... 10 AWG) or 1x (12 AWG ... 10 AWG) |
| Temperature of the conductor for supply maximum permissible | 75 °C |
| Material of the conductor for supply | AL or CU |
| Type of electrical connection for load-side outgoing feeder | Screw-type terminals |


Subject to change without notice
© Copyright Siemens

| | |
|---|---|
| Tightening torque [lbf·in] for load-side outgoing feeder | 20 ... 24 lbf·in |
| Type of connectable conductor cross-sections at AWG conductors for load-side outgoing feeder single or multi-stranded | 2x (14 ... 10 AWG) |
| Temperature of the conductor for load-side outgoing feeder maximum permissible | 75 °C |
| Material of the conductor for load-side outgoing feeder | CU |
| Type of electrical connection of magnet coil | Screw-type terminals |
| Tightening torque [lbf·in] at magnet coil | 5 ... 12 lbf·in |
| Type of connectable conductor cross-sections of magnet coil at AWG conductors single or multi-stranded | 2x (16 ... 12 AWG) |
| Temperature of the conductor at magnet coil maximum permissible | 75 °C |
| Material of the conductor at magnet coil | CU |
| Type of electrical connection at contactor for auxiliary contacts | Screw-type terminals |
| Tightening torque [lbf·in] at contactor for auxiliary contacts | 10 ... 15 lbf·in |
| Type of connectable conductor cross-sections at contactor at AWG conductors for auxiliary contacts single or multi-stranded | 1x (12 AWG), 2x (16 ... 14 AWG), 2x (18 ... 16 AWG) |
| Temperature of the conductor at contactor for auxiliary contacts maximum permissible | 75 °C |
| Material of the conductor at contactor for auxiliary contacts | CU |
| Type of electrical connection at overload relay for auxiliary contacts | Screw-type terminals |
| Tightening torque [lbf·in] at overload relay for auxiliary contacts | 7 ... 10 lbf·in |
| Type of connectable conductor cross-sections at overload relay at AWG conductors for auxiliary contacts single or multi-stranded | 2x (20 ... 14 AWG) |
| Temperature of the conductor at overload relay for auxiliary contacts maximum permissible | 75 °C |
| Material of the conductor at overload relay for auxiliary contacts | CU |

| Short-circuit current rating | |
|---|---|
| Design of the short-circuit trip | Instantaneous trip circuit breaker |
| Maximum short-circuit current breaking capacity (Icu) | |
| • at 240 V | 100 kA |
| • at 480 V | 100 kA |
| • at 600 V | 25 kA |
| Certificate of suitability | NEMA ICS 2; UL 508; CSA 22.2, No.14 |


Subject to change without notice
© Copyright Siemens

## Further information

**Industrial Controls - Product Overview (Catalogs, Brochures,…)**
www.usa.siemens.com/iccatalog

**Industry Mall (Online ordering system)**
https://mall.industry.siemens.com/mall/en/us/Catalog/product?mlfb=US2:84DUA950MD

**Service&Support (Manuals, Certificates, Characteristics, FAQs,...)**
https://support.industry.siemens.com/cs/US/en/ps/US2:84DUA950MD

**Image database (product images, 2D dimension drawings, 3D models, device circuit diagrams, EPLAN macros, ...)**
http://www.automation.siemens.com/bilddb/cax_de.aspx?mlfb=US2:84DUA950MD&lang=en

**Certificates/approvals**
https://support.industry.siemens.com/cs/US/en/ps/US2:84DUA950MD/certificate

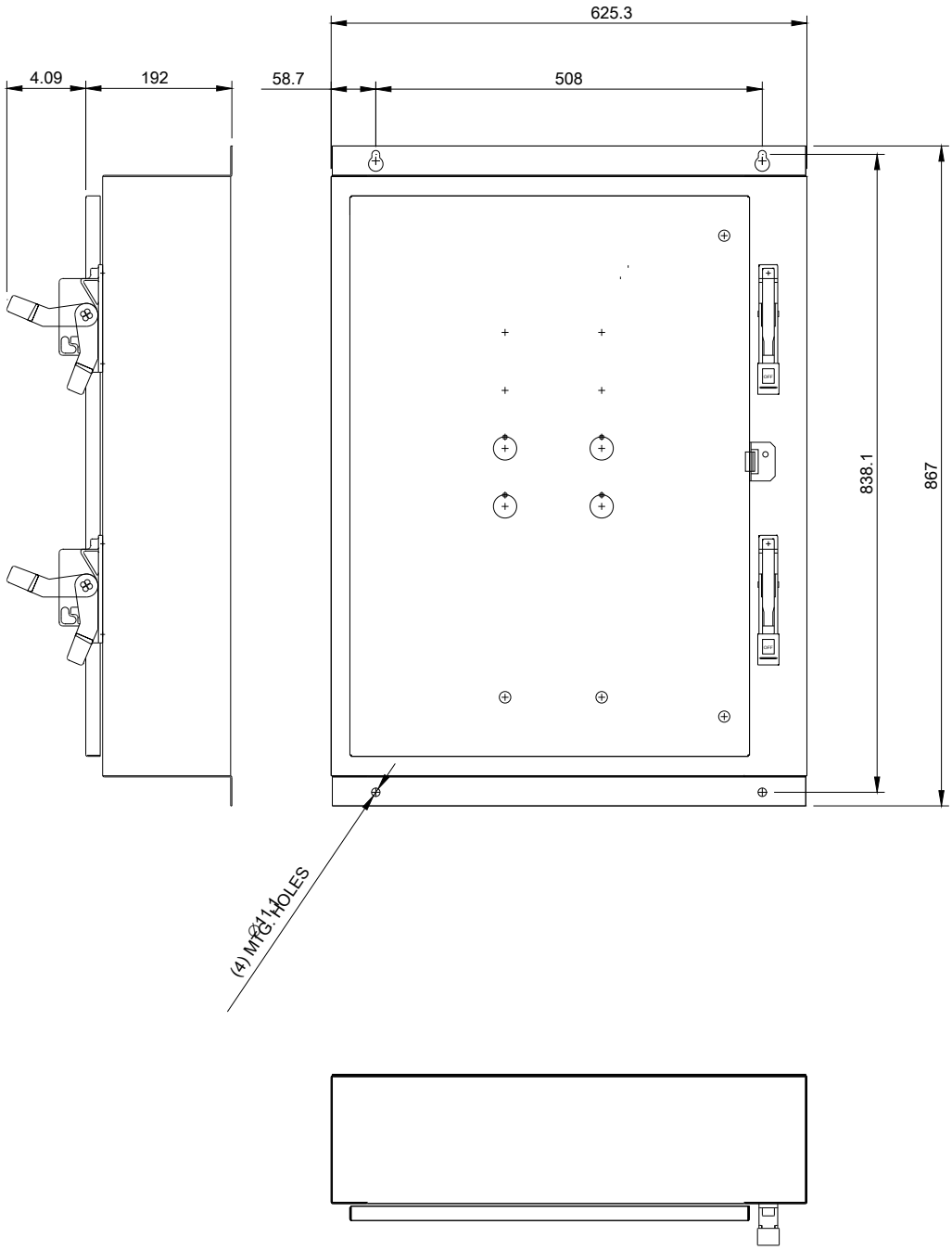



Subject to change without notice
© Copyright Siemens

## %%USCHEMATIC DIAGRAM

Class 83 & 84 Duplex W/Manual Alternation Size 0-4

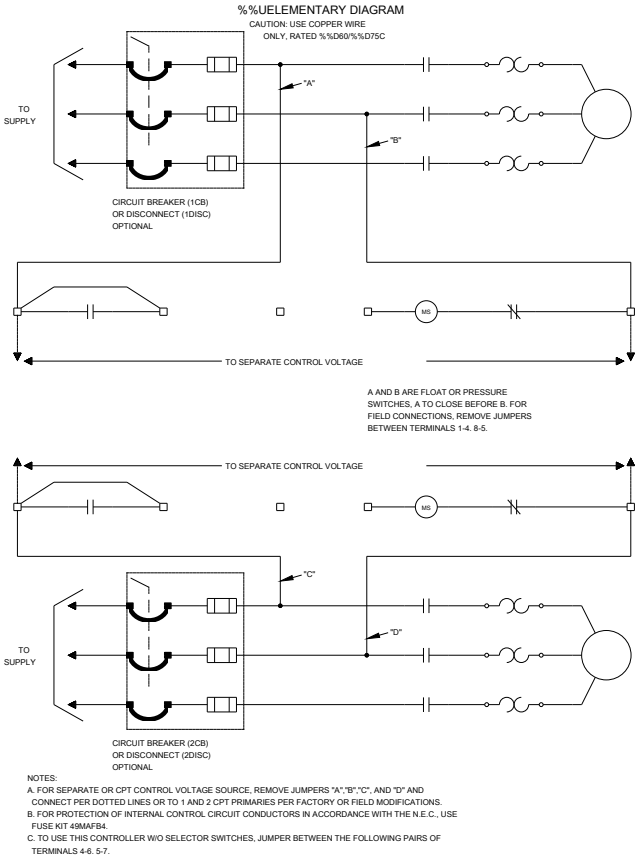


NOTES:

A. FOR SEPARATE OR CPT CONTROL VOLTAGE SOURCE, REMOVE JUMPERS "A","B","C", AND "D" AND CONNECT PER DOTTED LINES OR TO 1 AND 2 CPT PRIMARIES PER FACTORY OR FIELD MODIFICATIONS.

B. FOR PROTECTION OF INTERNAL CONTROL CIRCUIT CONDUCTORS IN ACCORDANCE WITH THE N.E.C., USE FUSE KIT 49MAFB4.

C. TO USE THIS CONTROLLER W/O SELECTOR SWITCHES, JUMPER BETWEEN THE FOLLOWING PAIRS OF TERMINALS 4-6. 5-7.

D68077003

**last modified:** 11/15/2019



Subject to change without notice
© Copyright Siemens