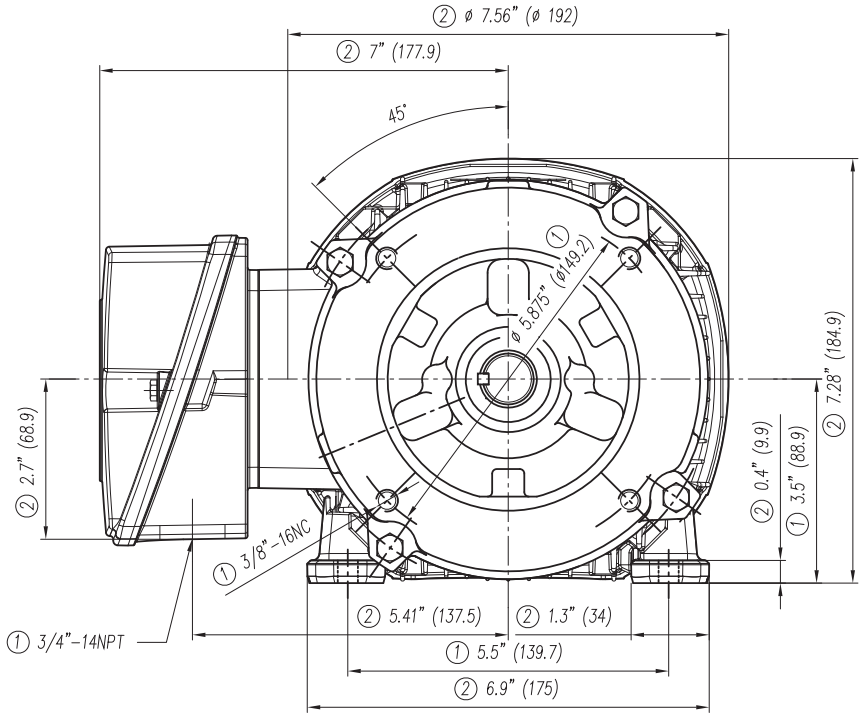

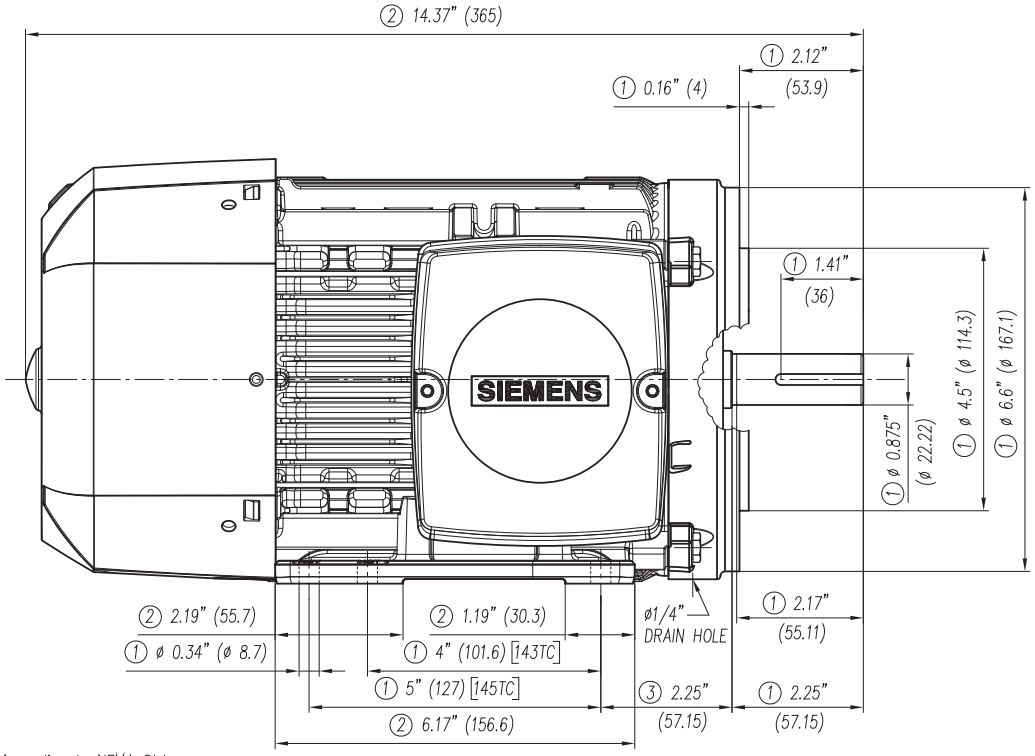

① Tolerances According to NEMA Std.
② All these dimensions corresponding to assemblies and castings shall have a tolerance as per DIN standard 1686-GTB-19.
③ Not according to NEMA Std.

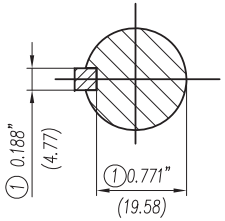

Keyseat detail

②

Tolerance in mm. according to DIN-1686-GTB-19	
to 18	± 4.5
Over 18 to 30	± 4.7
Over 30 to 50	± 5
Over 50 to 80	± 5.5
Over 80 to 120	± 6
Over 120 to 180	± 6.5
Over 180 to 250	± 7
Over 250 to 315	± 7.5
Over 315 to 400	± 8
Over 400 to 500	± 8.5
Over 500 to 630	± 9.5
Over 630 to 800	± 10

Quantity: 04 03 02 01

Remark

Parts and Measure	Drawing No. Norm No.	Item No.	Material	Weight Lbs.

European Proyection

Modific.

Dimensions in inches

	Date	Name
Drawn	6/Jul/2006	Fdo.Macias
Checked		
Std. Ckd.		

Dimension Drawing NEMA

NNM

Type: 1LE2 GP10A,GP100A 143/145TC FRAME 2, 4 & 6 Pol.

Scale W/O

SIEMENS
GUADALAJARA FACTORY

3MSE 220 0866

Ref. 3MSE 220 851 Replace.

2/2

CERTIFIED PRINT

CUSTOMER

PO#	SO#					
HP	RPM	FRAME	TYPE	VOLTS	PH	HZ

F200/1095