SIEMENS

Data sheet US2:84IUH95BDL

Duplex starter W/O alternator Size 3.5 Three phase full voltage Solid-state overload relay OLRelay amp range 50-200A 240VAC 50HZ / 277VAC 60HZ coil Combination type Two 200A disconnect switches Enclosure NEMA type 1 Indoor general purpose use

Figure similar

Product brand name	Class 84
Design of the product	Duplex controller with two non-fusible disconnect switches without alternator
Special product feature	ESP200 overload relay; Half-size controller

General technical data	
Weight [lb]	106 lb
Height x Width x Depth [in]	56 × 29 × 10 in
Protection against electrical shock	NA for enclosed products
Installation altitude [ft] at height above sea level maximum	6560 ft
Ambient temperature [°F]	
• during storage maximum	149 °F
• during operation maximum	104 °F
Ambient temperature	
• during storage maximum	65 °C
• during operation maximum	40 °C
Country of origin	USA

Subject to change without notice
© Copyright Siemens

Horsepower ratings	
Yielded mechanical performance [hp] for three-phase AC motor	
• at 200/208 V rated value	30 hp
• at 220/230 V rated value	40 hp
• at 460/480 V rated value	75 hp
• at 575/600 V rated value	75 hp

Contactor	
Size of contactor	Controller half size 3 1/2
Number of NO contacts for main contacts	3
Operating voltage for main current circuit at AC at 60 Hz maximum	600 V
Operating current at AC at 600 V rated value	115 A
Mechanical service life (switching cycles) of the main contacts typical	5000000

Auxiliary contact	
Number of NC contacts at contactor for auxiliary contacts	0
Number of NO contacts at contactor for auxiliary contacts	1
Number of total auxiliary contacts maximum	7
Contact rating of auxiliary contacts of contactor according to UL	10A@600VAC (A600), 5A@600VDC (P600)

Coil	
Type of voltage of the control supply voltage	AC
Control supply voltage	
• at DC rated value	0 ... 0 V
• at AC at 50 Hz rated value	240 ... 240 V
• at AC at 60 Hz rated value	277 ... 277 V
Holding power at AC minimum	14 W
Apparent pick-up power of magnet coil at AC	310 V·A
Apparent holding power of magnet coil at AC	26 V·A
Operating range factor control supply voltage rated value of magnet coil	0.85 ... 1.1
Percental drop-out voltage of magnet coil related to the input voltage	50 %
Switch-on delay time	26 ... 41 ms
Off-delay time	14 ... 19 ms

Overload relay	
Product function	
• Overload protection	Yes
• Phase failure detection	Yes

Subject to change without notice
© Copyright Siemens

• Phase unbalance	Yes
• Ground fault detection	Yes
• Test function	Yes
• External reset	Yes
Reset function	Manual, automatic and remote
Trip class	Class 5 / 10 / 20 (factory set) / 30
Adjustable pick-up value current of the current-dependent overload release	50 ... 200 A
Trip time at phase-loss maximum	3 s
Relative repeat accuracy	1 %
Number of NC contacts of auxiliary contacts of overload relay	1
Number of NO contacts of auxiliary contacts of overload relay	1
Operating current of auxiliary contacts of overload relay	
• at AC at 600 V	5 A
• at DC at 250 V	1 A
Contact rating of auxiliary contacts of overload relay according to UL	5A@600VAC (B600), 1A@250VDC (R300)
Insulation voltage	
• with single-phase operation at AC rated value	600 V
• with multi-phase operation at AC rated value	300 V

Disconnect Switch	
Rated response values of switch disconnector	200A / 600V
Design of fuse holder	non-fusible
Operating class of the fuse link	non-fusible

Enclosure	
Degree of protection NEMA rating of the enclosure	NEMA Type 1
Design of the housing	Indoor general purpose use

Mounting/wiring	
Mounting position	Vertical
Mounting type	Surface mounting and installation
Type of electrical connection for supply voltage line-side	Box lug
Tightening torque [lbf·in] for supply	275 ... 275 lbf·in
Type of connectable conductor cross-sections at line-side at AWG conductors single or multi-stranded	1x (6 AWG ... 300 Kcmil)
Temperature of the conductor for supply maximum permissible	75 °C
Material of the conductor for supply	AL or CU
Type of electrical connection for load-side outgoing feeder	Box lug

Subject to change without notice
© Copyright Siemens

Tightening torque [lbf·in] for load-side outgoing feeder	120 ... 120 lbf·in
Type of connectable conductor cross-sections at AWG conductors for load-side outgoing feeder single or multi-stranded	1x (14 ... 2/0 AWG)
Temperature of the conductor for load-side outgoing feeder maximum permissible	75 °C
Material of the conductor for load-side outgoing feeder	AL or CU
Type of electrical connection of magnet coil	Screw-type terminals
Tightening torque [lbf·in] at magnet coil	5 ... 12 lbf·in
Type of connectable conductor cross-sections of magnet coil at AWG conductors single or multi-stranded	2x (16 ... 12 AWG)
Temperature of the conductor at magnet coil maximum permissible	75 °C
Material of the conductor at magnet coil	CU
Type of electrical connection at contactor for auxiliary contacts	Screw-type terminals
Tightening torque [lbf·in] at contactor for auxiliary contacts	10 ... 15 lbf·in
Type of connectable conductor cross-sections at contactor at AWG conductors for auxiliary contacts single or multi-stranded	1x (12 AWG), 2x (16 ... 14 AWG), 2x (18 ... 16 AWG)
Temperature of the conductor at contactor for auxiliary contacts maximum permissible	75 °C
Material of the conductor at contactor for auxiliary contacts	CU
Type of electrical connection at overload relay for auxiliary contacts	Screw-type terminals
Tightening torque [lbf·in] at overload relay for auxiliary contacts	7 ... 10 lbf·in
Type of connectable conductor cross-sections at overload relay at AWG conductors for auxiliary contacts single or multi-stranded	2x (20 ... 14 AWG)
Temperature of the conductor at overload relay for auxiliary contacts maximum permissible	75 °C
Material of the conductor at overload relay for auxiliary contacts	CU

Short-circuit current rating

Design of the fuse link for short-circuit protection of the main circuit required	10kA@600V (Class H or K); 100kA@600V (Class R or J)
Certificate of suitability	NEMA ICS 2; UL 508; CSA 22.2, No.14

Further information

Industrial Controls - Product Overview (Catalogs, Brochures,…)
www.usa.siemens.com/iccatalog

Subject to change without notice
© Copyright Siemens

Industry Mall (Online ordering system)
https://mall.industry.siemens.com/mall/en/us/Catalog/product?mlfb=US2:84IUH95BDL

Service&Support (Manuals, Certificates, Characteristics, FAQs,...)
https://support.industry.siemens.com/cs/US/en/ps/US2:84IUH95BDL

Image database (product images, 2D dimension drawings, 3D models, device circuit diagrams, EPLAN macros, ...)
http://www.automation.siemens.com/bilddb/cax_de.aspx?mlfb=US2:84IUH95BDL&lang=en

Certificates/approvals
https://support.industry.siemens.com/cs/US/en/ps/US2:84IUH95BDL/certificate

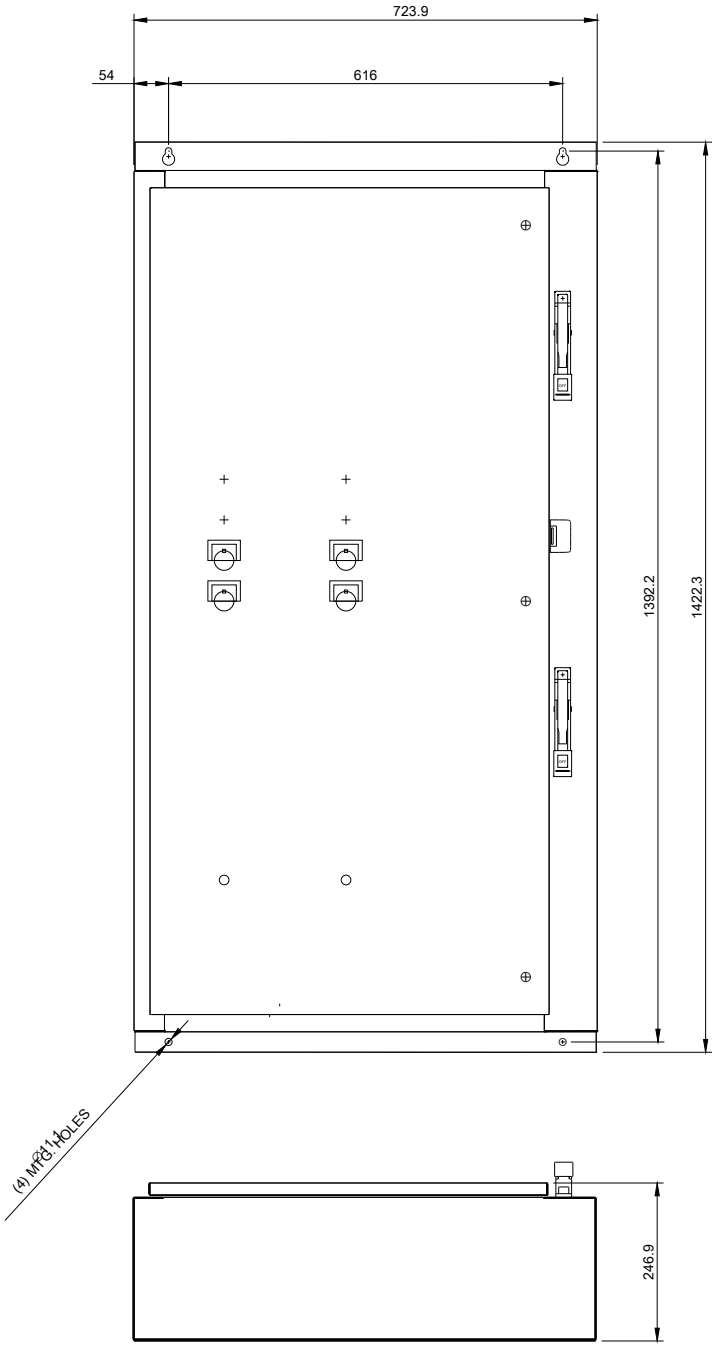

Subject to change without notice
© Copyright Siemens

%%USCHEMATIC DIAGRAM

Class 83 & 84 Duplex W/Manual Alternation Size 0-4

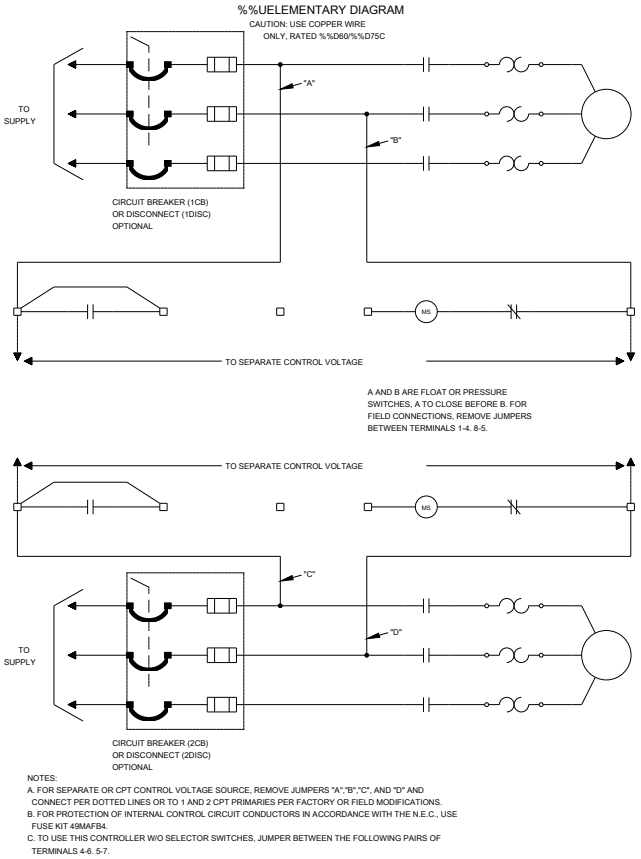

NOTES:

A. FOR SEPARATE OR CPT CONTROL VOLTAGE SOURCE, REMOVE JUMPERS "A","B","C", AND "D" AND CONNECT PER DOTTED LINES OR TO 1 AND 2 CPT PRIMARIES PER FACTORY OR FIELD MODIFICATIONS.

B. FOR PROTECTION OF INTERNAL CONTROL CIRCUIT CONDUCTORS IN ACCORDANCE WITH THE N.E.C., USE FUSE KIT 49MAFB4.

C. TO USE THIS CONTROLLER W/O SELECTOR SWITCHES, JUMPER BETWEEN THE FOLLOWING PAIRS OF TERMINALS 4-6. 5-7.

D68077003

last modified: 11/15/2019

Subject to change without notice
© Copyright Siemens