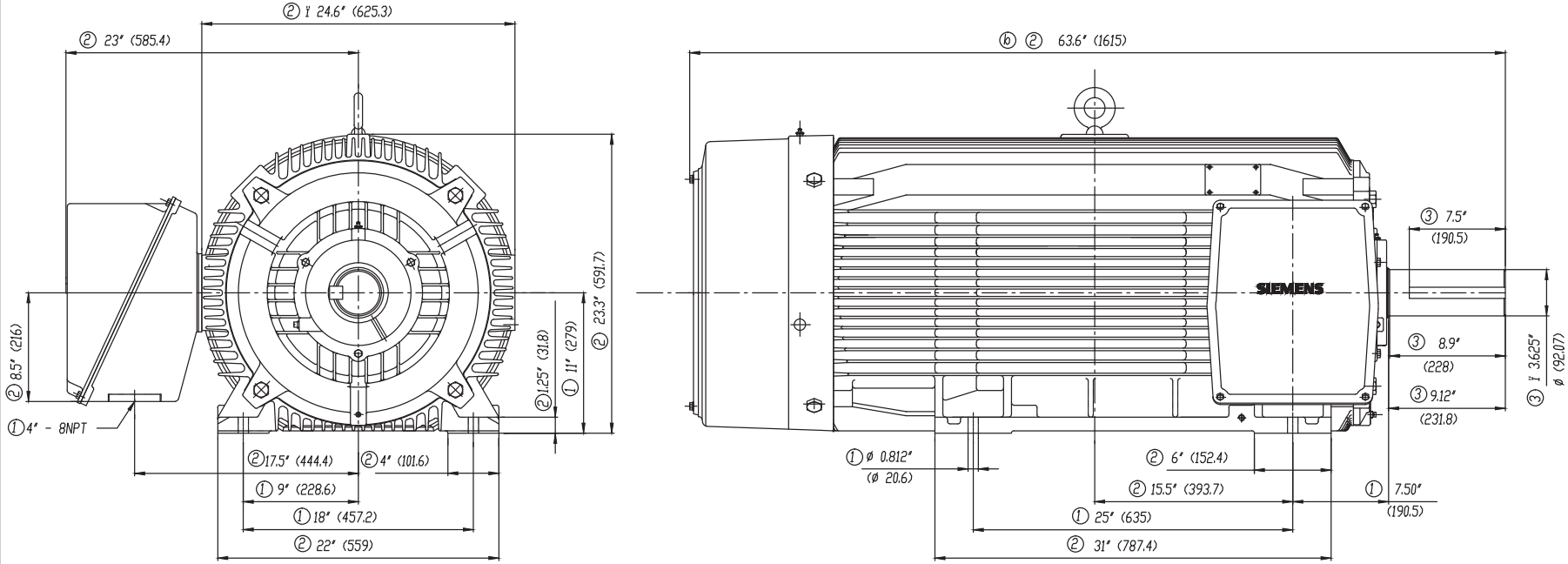

①Tolerances According to NEMA Std.

②All these dimensions corresponding to assemblies and castings shall have a tolerance as per DIN standard 1686-GTB-19.

③Not According to NEMA std.

CERTIFIED PRINT						
CUSTOMER						
PO#		SO#				
HP	RPM	FRAME	TYPE	VOLTS	PH	HZ

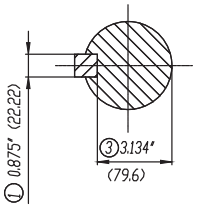

Keyseat detail

Tolerance in mm. according to DIN-1686-GTB-19	
to 18	± 4.5
Over 18 to 30	± 4.7
Over 30 to 50	± 5
Over 50 to 80	± 5.5
Over 80 to 120	± 6
Over 120 to 180	± 6.5
Over 180 to 250	± 7
Over 250 to 315	± 7.5
Over 315 to 400	± 8
Over 400 to 500	± 8.5
Over 500 to 630	± 9.5
Over 630 to 800	± 10

Quantity 04	03	02	01	Parts and Measure	Drawing No. Norm No.	Item. No.	Material	Weight Lbs.